COUNT	DESCRIPTION OF REVISIONS	BY	CHKD	DATE	COUNT	DESCRIPTION OF REVISIONS	BY	CHKD	DATE
△				. .	△				. .
△				. .	△				. .
△				. .	△				. .

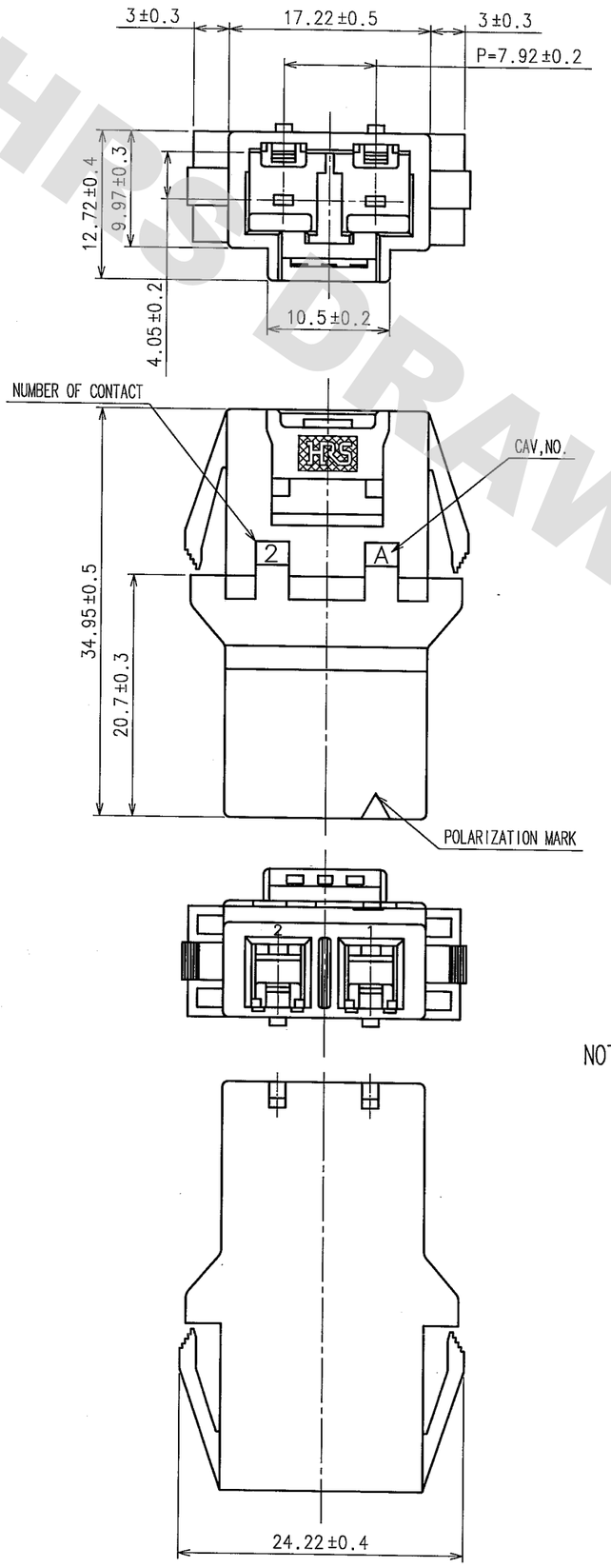

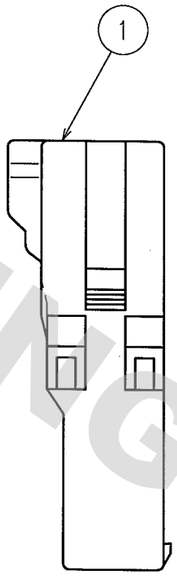

NOTE1. 100 PIECES PER PACK.
2. UL(FILE NO.E52653),
C-UL(FILE NO.E52653),
TÜV(FILE NO.R9950703),APPROVED PRODUCT.

RECOMMENDED PCB PATTERN

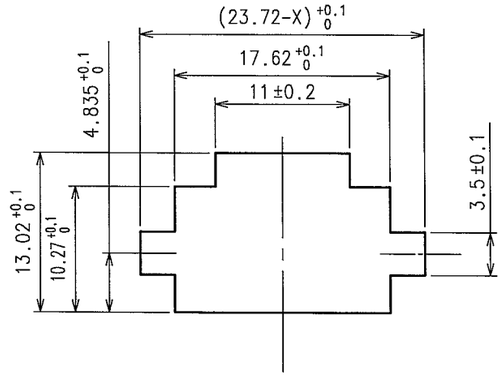

THICKESS	X
2.0	0.48
1.6	0.96
1.2	1.44
0.8	1.92

APPLICATION DIAGRAM

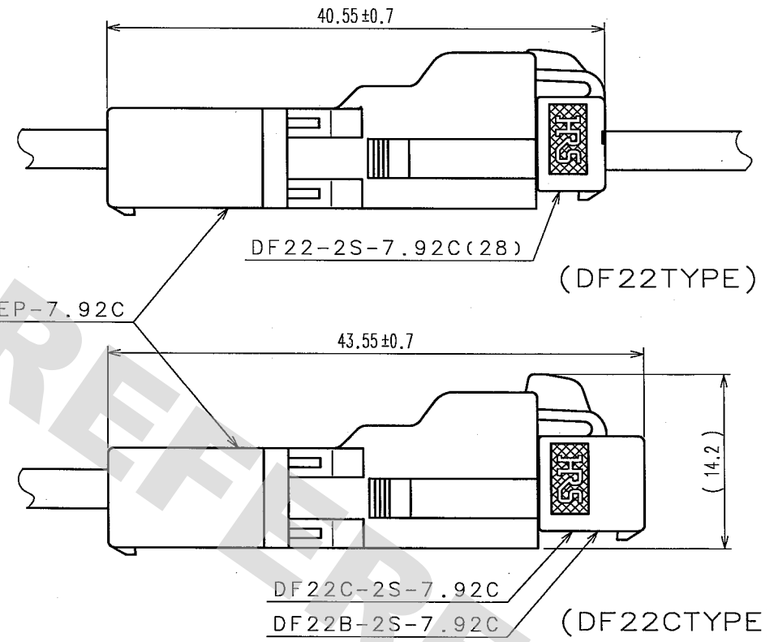

NO.	MATERIAL	FINISH, REMARKS
1	POLYAMIDE	NATURAL(WHITE)UL94V-0

備考 REMARKS

DRAWN	DESIGNED	CHECKED	APPROVED	RELEASED
A. Miura '05.09.14	D. Tanoyama '05.09.14	H. Umehara '05.09.14	T. Ono '05.09.14	

CODE NO.(OLD) CL

SCALE 2 : 1

単位 UNITS mm

DRAWING NO. EDC3-163561-01

HIROSE ELECTRIC CO.,LTD.

PART NO. DF22-2EP-7.92C

CODE NO. CL680-1049-2

1/1

FORM NO.233

TO

DRAWING FOR REFERENCE: This is subject to change without notice
08/11/2012

HRS DRAWING FOR REFERENCE