4000012662

CCT	A	B
2	2.5	7.375
3	5	9.875
4	7.5	12.375
5	10	14.875
6	12.5	17.375
7	15	19.875
8	17.5	22.375
9	20	24.875
10	22.5	27.375
11	25	29.875
12	27.5	32.375
13	30	34.875
14	32.5	37.375
15	35	39.875
16	37.5	42.375
17	40	44.875
18	42.5	47.375
19	45	49.875
20	47.5	52.375

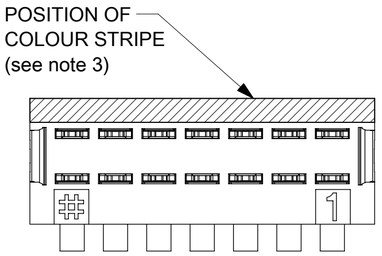

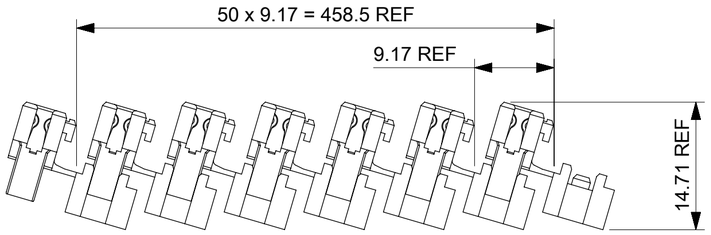

SHIPPING ARRANGEMENT

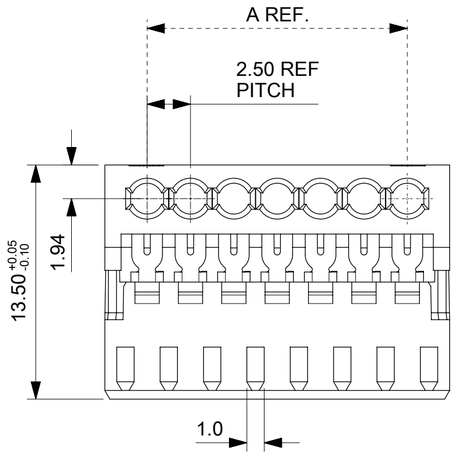

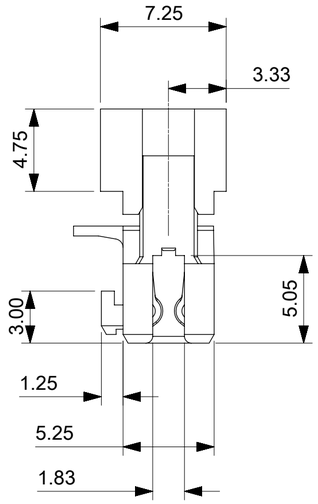

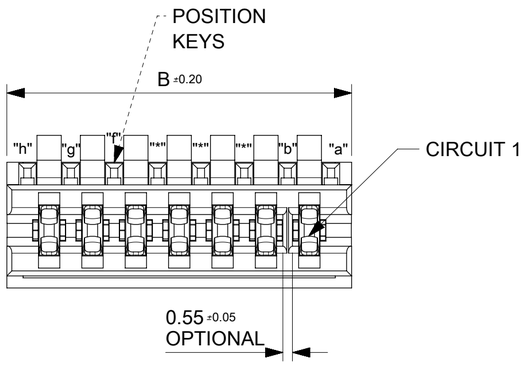

NOTES:
1. REFER TO PRODUCT SPECIFICATION: PS-99020-0040.
2. MATERIAL: HOUSING - POLYAMIDE 6 (PA6)
   UL94-V2. COLOUR NATURAL.
   TERMINAL: PHOSPHOR BRONZE 0.30 REF. THICK - PLATING
   HOT TIN DIP.
3. COLOUR STRIPE IS OPTIONAL. AVAILABLE IN THE FOLLOWING
   COLOURS: RED, GREEN, BLUE, ORANGE, BROWN & YELLOW.
   (BLACK SIGNIFIES CUSTOMER SPECIFIC CONFIGURATION).
4. REFER TO PACKAGING SPEC (PK-90871-001)
5. REFER TO APPLICATION SPEC (AS-99033-0008)

QUALITY SYMBOLS	
E/A	= 0
E/C	= 0
E/B	= 0
▼	= 0
E/F	= 0
☒	= 0
■	= 0
▽	= 0

THIS DRAWING CONTAINS INFORMATION THAT IS PROPRIETARY TO MOLEX ELECTRONIC TECHNOLOGIES, LLC AND SHOULD NOT BE USED WITHOUT WRITTEN PERMISSION

NEW PART# ADDED 2017/07/31
EC NO: 120091 2017/09/07
DRWN: BODEA
CHK'D: ZCRAMER 2017/09/07
APPR: BRUTTLE
REV: H

GENERAL TOLERANCES (UNLESS SPECIFIED)		
ANGULAR TOL	± 0.5	°
4 PLACES	±	
3 PLACES	± 0.05	
2 PLACES	± 0.1	
1 PLACE	± 0.2	
0 PLACES	±	

DRAFT WHERE APPLICABLE MUST REMAIN WITHIN DIMENSIONS

DIMENSION UNITS	mm
SCALE	4:1
DRWN BY	CFISHER01
DATE	2015/11/24
CHK'D BY	CMONAHAN
DATE	2016/01/19
APPR BY	MSHANAHAN
DATE	2016/01/20
DRAWING SIZE	A2
THIRD ANGLE PROJECTION	

molex

APPLI-MATE 2.5 FEMALE G.W.T. 750 VERSION

PRODUCT CUSTOMER DRAWING

SERIES	MATERIAL NUMBER	CUSTOMER
93050	SEE SHEETS	GENERAL MARKET

DOCUMENT NUMBER	DOC TYPE	DOC PART	SHEET NUMBER
930500001	PSD	000	1 OF 17

RELEASE STATUS	P1	RELEASE DATE	07.09.2017 16:24:01

FORMAT: master-tb-prod-A2
REVISION: F
DATE: 2015/11/16

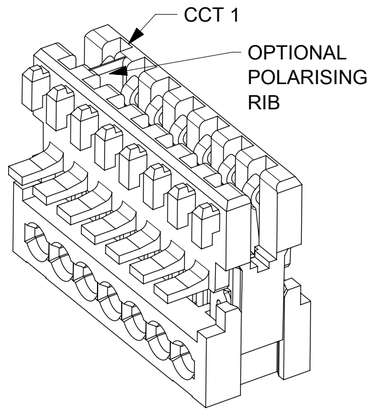

OPEN END WALL OPTION

FIRST END WALL	LAST END WALL
OPEN	OPEN

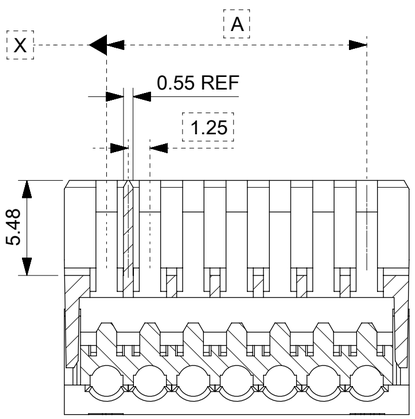

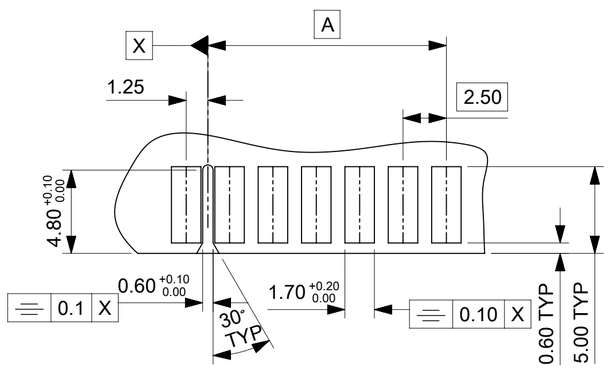

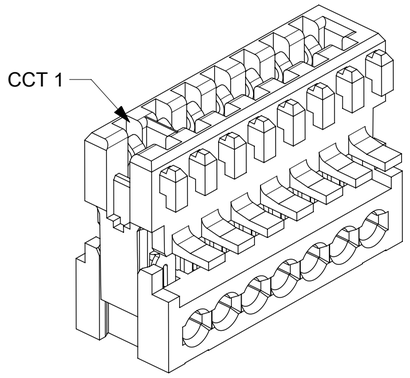

END WALL OPTION A

FIRST END WALL	LAST END WALL
HALF	CLOSED

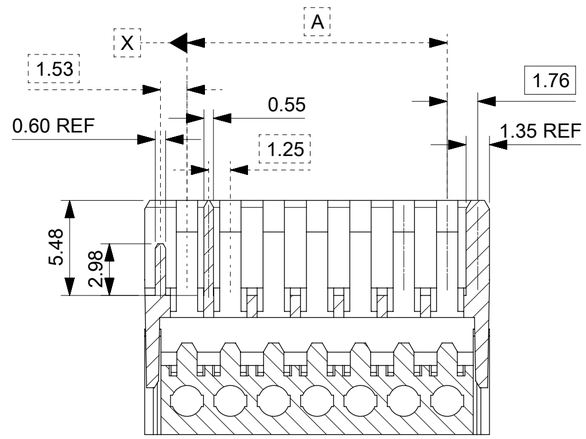

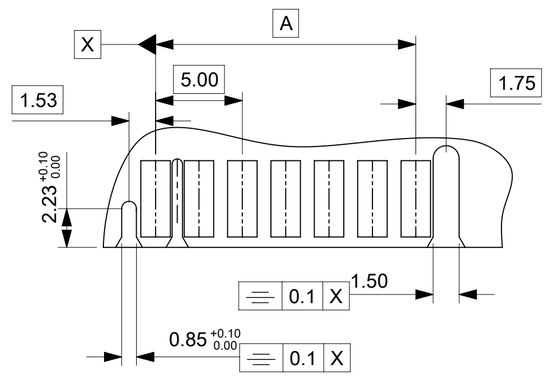

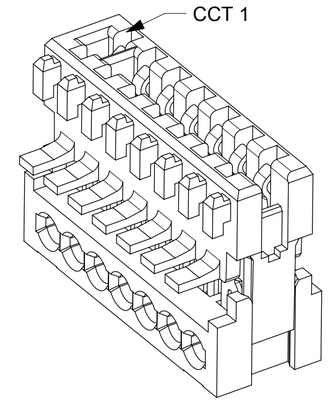

END WALL OPTION B

FIRST END WALL	LAST END WALL
CLOSED	HALF

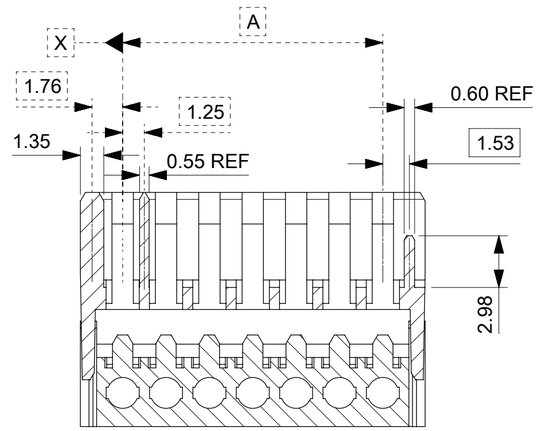

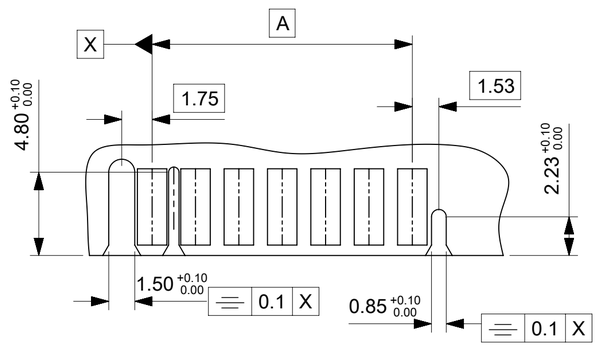

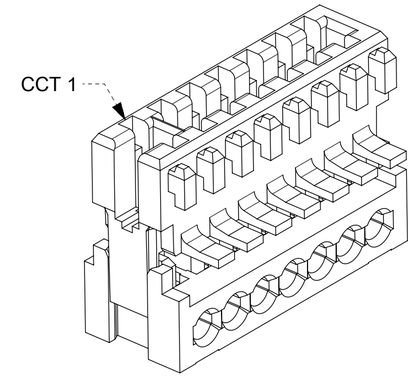

END WALL OPTION C

FIRST END WALL	LAST END WALL
OPEN	CLOSED

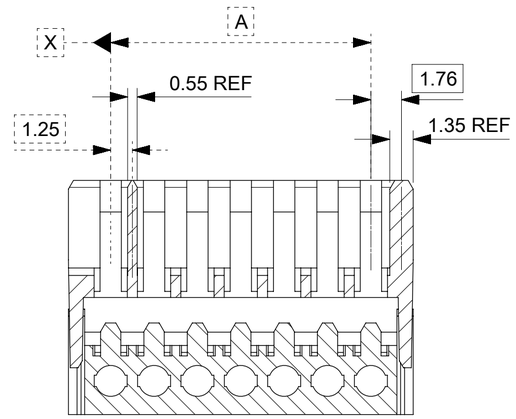

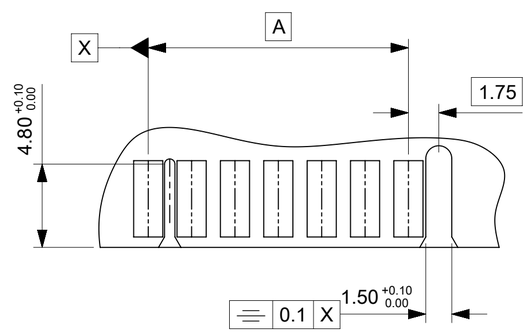

- PCB LAYOUT CCTCONNECTOR
  (WITH OPTIONAL POSITIONAL RIB SLOT BETWEEN
  CCT 1 & 2)
- RECOMMENDED PCB THICKNESS 1.5 ± 0.14

QUALITY SYMBOLS	
E/A	= 0
E/C	= 0
E/P	= 0
▼	= 0
V	= 0
☒	= 0
■	= 0
▽	= 0

THIS DRAWING CONTAINS INFORMATION THAT IS PROPRIETARY TO MOLEX ELECTRONIC TECHNOLOGIES, LLC AND SHOULD NOT BE USED WITHOUT WRITTEN PERMISSION

REV		
H	EC NO: 120091	2017/07/31
	DRWN: BODEA	2017/09/07
	CHK'D: ZCRAMER	2017/09/07
	APPR: BRUTTLE	
	NEW PART# ADDED	

GENERAL TOLERANCES (UNLESS SPECIFIED)

ANGULAR TOL ±	0.5 °
4 PLACES	±
3 PLACES	± 0.05
2 PLACES	± 0.1
1 PLACE	± 0.2
0 PLACES	±

DRAFT WHERE APPLICABLE MUST REMAIN WITHIN DIMENSIONS

DIMENSION UNITS	mm
SCALE	4:1
DRWN BY	CFISHER01
DATE	2015/11/24
CHK'D BY	CMONAHAN
DATE	2016/01/19
APPR BY	MSHANAHAN
DATE	2016/01/20
DRAWING SIZE	A2
THIRD ANGLE PROJECTION	

molex

APPLI-MATE 2.5 FEMALE G.W.T. 750 VERSION

PRODUCT CUSTOMER DRAWING

SERIES	MATERIAL NUMBER	CUSTOMER
93050	SEE SHEETS	GENERAL MARKET

DOCUMENT NUMBER	DOC TYPE	DOC PART	SHEET NUMBER
930500001	PSD	000	2 OF 17

RELEASE STATUS	P1	RELEASE DATE	07.09.2017 16:24:01

FORMAT: molex-dc-prod-A2
REVISION: F
DATE: 2015/1/16

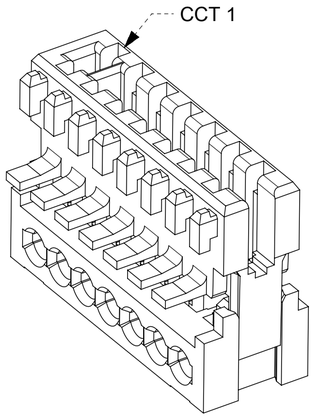

END WALL OPTION D

FIRST END WALL	LAST END WALL
CLOSED	OPEN

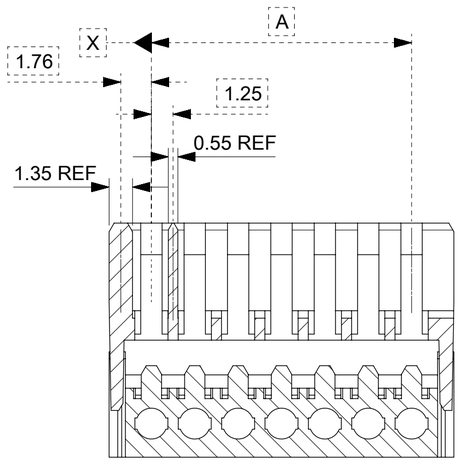

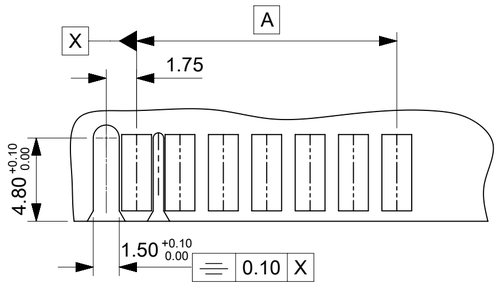

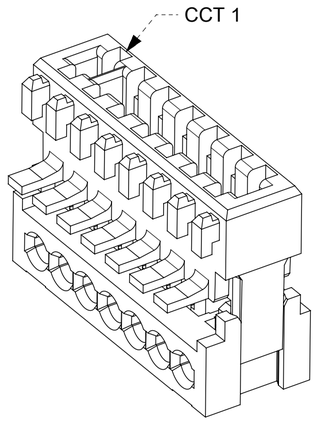

END WALL OPTION E

FIRST END WALL	LAST END WALL
CLOSED	CLOSED

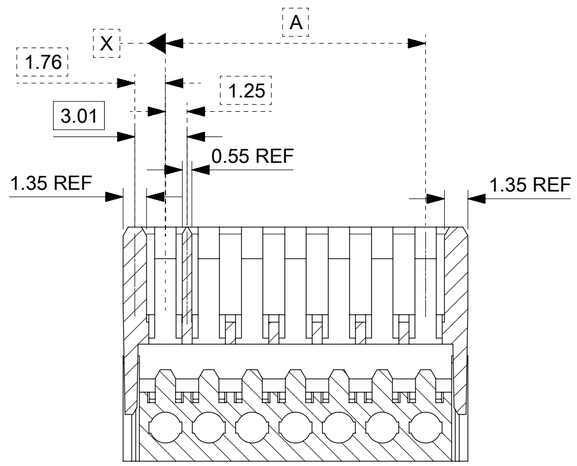

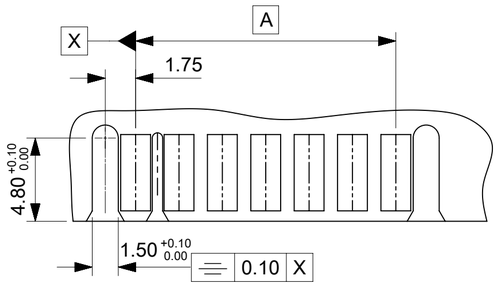

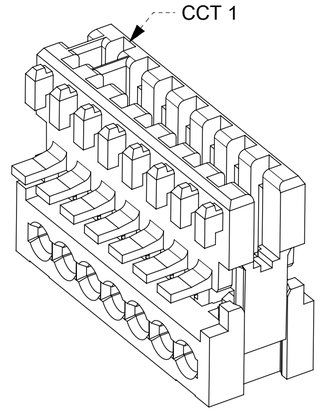

END WALL OPTION F

FIRST END WALL	LAST END WALL
NARROW	OPEN

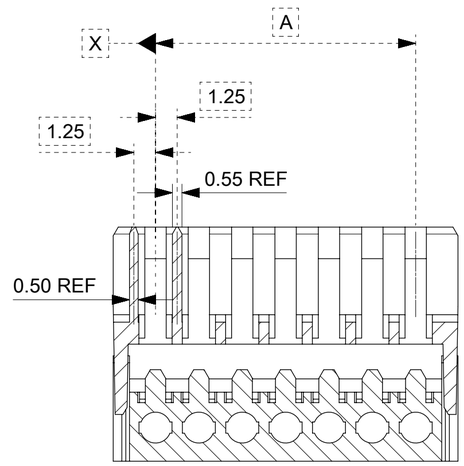

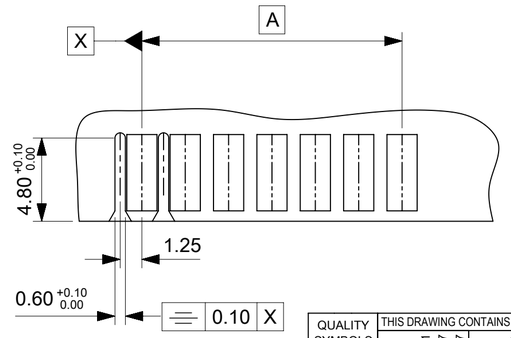

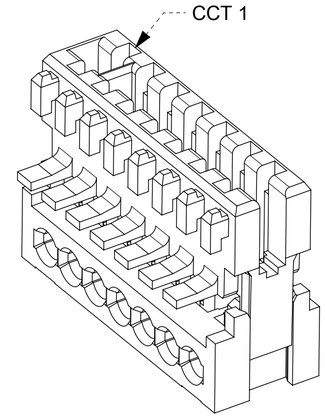

END WALL OPTION G

FIRST END WALL	LAST END WALL
NARROW FLUSH	OPEN

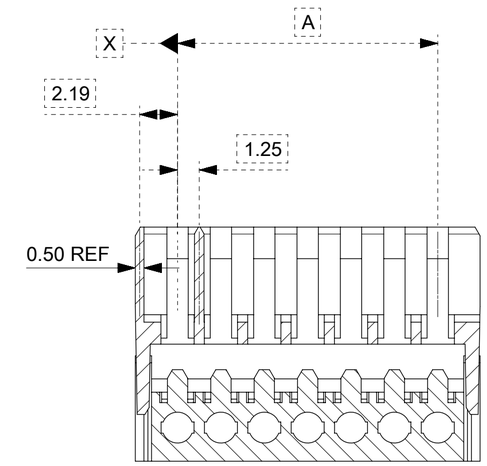

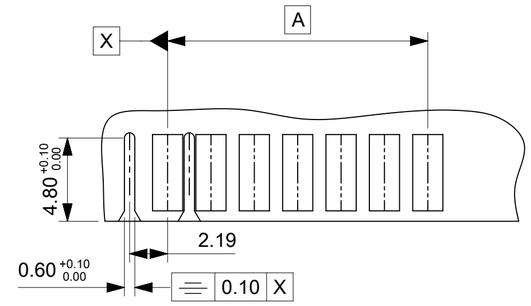

RELEASE STATUS	P1	RELEASE DATE	07.09.2017 16:24:01

QUALITY SYMBOLS	
A	= 0
E	= 0
D	= 0
▼	= 0
C	= 0
☒	= 0
■	= 0
▽	= 0

NEW PART# ADDED	2017/07/31	EC NO: 120091
	2017/09/07	DRWN: BODEA
	2017/09/07	CHK'D: ZCRAMER
		APPR: BRUTTLE
H		REV

THIS DRAWING CONTAINS INFORMATION THAT IS PROPRIETARY TO MOLEX ELECTRONIC TECHNOLOGIES, LLC AND SHOULD NOT BE USED WITHOUT WRITTEN PERMISSION

GENERAL TOLERANCES (UNLESS SPECIFIED)		
ANGULAR TOL	±	0.5 °
4 PLACES	±	
3 PLACES	±	0.05
2 PLACES	±	0.1
1 PLACE	±	0.2
0 PLACES	±	

DRAFT WHERE APPLICABLE MUST REMAIN WITHIN DIMENSIONS

DIMENSION UNITS	SCALE
mm	4:1

DRWN BY: CFISHER01	DATE: 2015/11/24
CHK'D BY: CMONAHAN	DATE: 2016/01/19
APPR BY: MSHANAHAN	DATE: 2016/01/20

DRAWING SIZE: A2

THIRD ANGLE PROJECTION

molex

APPLI-MATE 2.5 FEMALE G.W.T. 750 VERSION

PRODUCT CUSTOMER DRAWING

SERIES	MATERIAL NUMBER	CUSTOMER
93050	SEE SHEETS	GENERAL MARKET

DOCUMENT NUMBER	DOC TYPE	DOC PART	SHEET NUMBER
930500001	PSD	000	3 OF 17

FORMAT: master-tb-prod-A2
REVISION: F
DATE: 2015/11/18

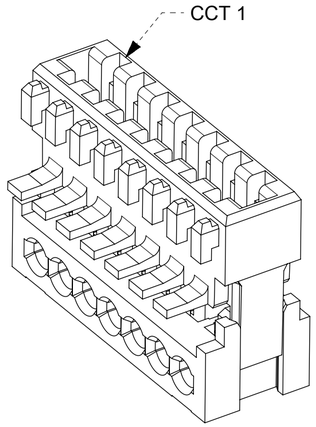

END WALL OPTION H

FIRST END WALL	LAST END WALL
NARROW FLUSH	NARROW FLUSH

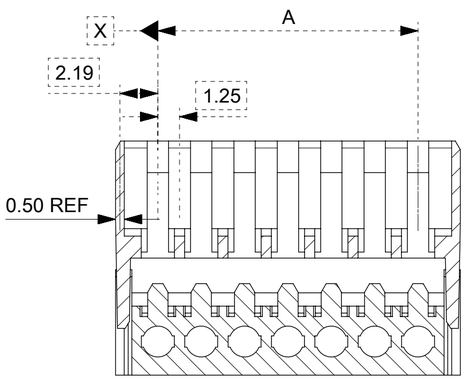

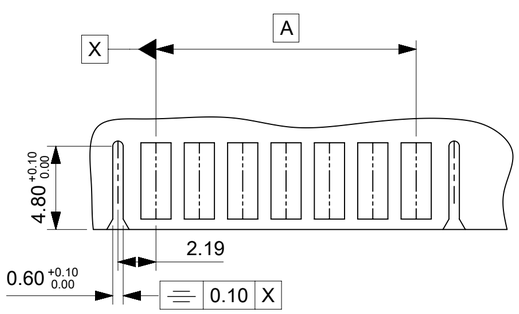

QUALITY SYMBOLS	
E/A	= 0
E/C	= 0
E/P	= 0
▼	= 0
V	= 0
☒	= 0
■	= 0
V	= 0

THIS DRAWING CONTAINS INFORMATION THAT IS PROPRIETARY TO MOLEX ELECTRONIC TECHNOLOGIES, LLC AND SHOULD NOT BE USED WITHOUT WRITTEN PERMISSION

REV		
H	NEW PART# ADDED	2017/07/31
	EC NO: 120091	2017/09/07
	DRWN: BODEA	2017/09/07
	CHK'D: ZCRAMER	
	APPR: BRUTTLE	

GENERAL TOLERANCES (UNLESS SPECIFIED)

ANGULAR TOL ±	0.5 °
4 PLACES	±
3 PLACES	± 0.05
2 PLACES	± 0.1
1 PLACE	± 0.2
0 PLACES	±

DRAFT WHERE APPLICABLE MUST REMAIN WITHIN DIMENSIONS

DIMENSION UNITS	mm
SCALE	4:1
DRWN BY	CFISHER01
DATE	2015/11/24
CHK'D BY	CMONAHAN
DATE	2016/01/19
APPR BY	MSHANAHAN
DATE	2016/01/20
DRAWING SIZE	A2
THIRD ANGLE PROJECTION	

molex

APPLI-MATE 2.5 FEMALE G.W.T. 750 VERSION

PRODUCT CUSTOMER DRAWING

SERIES	MATERIAL NUMBER	CUSTOMER
93050	SEE SHEETS	GENERAL MARKET

DOCUMENT NUMBER	DOC TYPE	DOC PART	SHEET NUMBER
930500001	PSD	000	4 OF 17

RELEASE STATUS	P1	RELEASE DATE	07.09.2017 16:24:01

FORMAT: master-tb-prod-A2
REVISION: F
DATE: 2015/11/16

2 CIRCUIT

PART NUMBER	HOUSING USED	TERMINAL VOID POSITION	REMOVED POSITION KEYS	CONFIGURATION	FIRST ENDWALL	LAST ENDWALL	POLARIZING RIB BETWEEN	COLOUR STRIPE
93050-9001	93049-0002	NONE	NONE	1 2	OPEN	OPEN	NONE	NONE
93050-9002	93049-0102	NONE	NONE	1 2	OPEN	OPEN	BETWEEN CCT 1&2	NONE
93050-9003	93049-0002	NONE	a	a 1 2	OPEN	OPEN	NONE	NONE
93050-9004	93049-0002	NONE	b	b 1 2	OPEN	OPEN	NONE	NONE
93050-9005	93049-0002	NONE	c	c 1 2	OPEN	OPEN	NONE	NONE
93050-9006	93049-0002	NONE	ALL	a b c 1 2	OPEN	OPEN	NONE	NONE
93050-9007	93049-0062	NONE	NONE	1 2	CLOSED	OPEN	NONE	NONE
93050-9008	93049-0122	NONE	NONE	1 2	CLOSED	CLOSED	BETWEEN CCT 1&2	NONE
93050-9009	93049-0022	NONE	NONE	1 2	CLOSED	CLOSED	NONE	NONE

NOTES

1. + DENOTES TERMINAL VOIDED POSITION
   ⊕ DENOTES TERMINAL LOADED POSITION
   | DENOTES POLARIZING RIB POSITION
2. MOLEX HOUSING NO. FOR REFERENCE ONLY

QUALITY SYMBOLS
A = 0
E = 0
B = 0
▼ = 0
C = 0
☒ = 0
■ = 0
▽ = 0

NEW PART# ADDED 2017/07/31
EC NO: 120091 2017/09/07
DRWN: BODEA 2017/09/07
CHK'D: ZCRAMER
APPR: BRUTTLE
REV H

THIS DRAWING CONTAINS INFORMATION THAT IS PROPRIETARY TO MOLEX ELECTRONIC TECHNOLOGIES, LLC AND SHOULD NOT BE USED WITHOUT WRITTEN PERMISSION

GENERAL TOLERANCES (UNLESS SPECIFIED)
ANGULAR TOL ± 0.5 °
4 PLACES ±
3 PLACES ± 0.05
2 PLACES ± 0.1
1 PLACE ± 0.2
0 PLACES ±
DRAFT WHERE APPLICABLE MUST REMAIN WITHIN DIMENSIONS

DIMENSION UNITS: mm
SCALE: 1:1
DRWN BY: CFISHER01 DATE: 2015/11/24
CHK'D BY: CMONAHAN DATE: 2016/01/19
APPR BY: MSHANAHAN DATE: 2016/01/20
DRAWING SIZE: A2
THIRD ANGLE PROJECTION

molex

APPLI-MATE 2.5 FEMALE G.W.T. 750 VERSION

PRODUCT CUSTOMER DRAWING

SERIES	MATERIAL NUMBER	CUSTOMER
93050	SEE SHEETS	GENERAL MARKET

DOCUMENT NUMBER	DOC TYPE	DOC PART	SHEET NUMBER
930500001	PSD	000	5 OF 17

RELEASE STATUS | P1 | RELEASE DATE | 07.09.2017 16:24:01

FORMAT: master-tb-prod-A2
REVISION: D
DATE: 2015/09/04

3 CIRCUIT

PART NUMBER	HOUSING USED	TERMINAL VOID POSITION	REMOVED POSITION KEYS	CONFIGURATION	FIRST ENDWALL	LAST ENDWALL	POLARIZING RIB BETWEEN	COLOUR STRIPE
93050-0001	93049-0003	NONE	NONE		OPEN	OPEN	NONE	NONE
93050-0003	93049-0003	NONE	b d		OPEN	OPEN	NONE	NONE
93050-0005	93049-0003	NONE	b		OPEN	OPEN	NONE	NONE
93050-0006	93049-0003	NONE	d		OPEN	OPEN	NONE	NONE
93050-0007	93049-0003	NONE	a c		OPEN	OPEN	NONE	NONE
93050-0008	93049-0003	NONE	a b		OPEN	OPEN	NONE	NONE
93050-0009	93049-0003	NONE	c d		OPEN	OPEN	NONE	NONE
93050-0012	93049-0103	NONE	b c		OPEN	OPEN	BETWEEN CCT 1&2	NONE
93050-0013	93049-0103	NONE	a		OPEN	OPEN	BETWEEN CCT 1&2	NONE
93050-0014	93049-0203	NONE	c		OPEN	OPEN	BETWEEN CCT 2&3	BLUE
93050-0016	93049-0103	NONE	NONE		OPEN	OPEN	BETWEEN CCT 1&2	NONE
93050-0017	93049-0203	NONE	NONE		OPEN	OPEN	BETWEEN CCT 2&3	NONE
93050-0018	93049-0003	NONE	a b c		OPEN	OPEN	NONE	NONE
93050-0019	93049-0003	NONE	c		OPEN	OPEN	NONE	NONE
93050-0020	93049-0003	NONE	a d		OPEN	OPEN	NONE	NONE
93050-0021	93049-0003	NONE	NONE		OPEN	OPEN	NONE	BLUE
93050-0022	93049-0103	NONE	NONE		OPEN	OPEN	BETWEEN CCT 1&2	BLUE
93050-0023	93049-0003	NONE	b c		OPEN	OPEN	NONE	NONE
93050-0024	93049-0003	NONE	a		OPEN	OPEN	NONE	NONE
93050-0025	93049-0003	NONE	a d		OPEN	OPEN	NONE	RED
93050-0026	93049-0003	NONE	c		OPEN	OPEN	NONE	RED
93050-0027	93049-0003	CCT 3	c		OPEN	OPEN	NONE	BLUE
93050-0028	93049-0003	NONE	b d		OPEN	OPEN	NONE	RED
93050-0029	93049-0003	NONE	a c		OPEN	OPEN	NONE	RED
93050-0030	93049-0003	CCT 1	NONE		OPEN	OPEN	NONE	NONE
93050-0031	93049-0003	CCT 3	NONE		OPEN	OPEN	NONE	NONE
93050-0151	93049-0063	NONE	NONE		CLOSED	OPEN	NONE	NONE
93050-0032	93049-0003	NONE	NONE		OPEN	OPEN	NONE	BROWN
93050-0034	93049-0103	NONE	NONE		OPEN	OPEN	BETWEEN CCT 1&2	BLACK
93050-0351	93049-0223	NONE	NONE		CLOSED	CLOSED	BETWEEN CCT 2&3	NONE

3 CIRCUIT

PART NUMBER	HOUSING USED	TERMINAL VOID POSITION	REMOVED POSITION KEYS	CONFIGURATION	FIRST ENDWALL	LAST ENDWALL	POLARIZING RIB BETWEEN	COLOUR STRIPE
93050-0152	93049-0063	NONE	NONE		CLOSED	OPEN	NONE	BLUE
93050-0038	93049-0003	CCT 3	NONE		OPEN	OPEN	NONE	BLACK
93050-0037	93049-0003	NONE	b		OPEN	OPEN	NONE	BLUE
93050-0352	93049-0023	NONE	NONE		CLOSED	CLOSED	NONE	NONE
93050-0039	93049-0203	NONE	NONE		OPEN	OPEN	BETWEEN CCT 2&3	RED
93050-0153	93049-0063	NONE	a c		CLOSED	OPEN	NONE	NONE
93050-0154	93049-0063	NONE	d		CLOSED	OPEN	NONE	NONE
93050-0040	93049-0103	NONE	NONE		OPEN	OPEN	BETWEEN CCT 1&2	NONE
93050-0041	93049-0203	NONE	NONE		OPEN	OPEN	BETWEEN CCT 2&3	NONE
93050-0042	93049-0003	NONE	ALL		OPEN	OPEN	NONE	NONE
93050-0044	93049-0203	NONE	a d		OPEN	OPEN	BETWEEN CCT 2&3	BLUE
93050-0045	93049-0043	NONE	d		OPEN	CLOSED	NONE	NONE
93050-0046	93049-0003	NONE	a b d		OPEN	OPEN	NONE	NONE
93050-0047	93049-0043	NONE	a d		OPEN	CLOSED	NONE	GREEN
93050-0048	93049-0003	NONE	a d		OPEN	OPEN	NONE	BLUE
93050-0049	93049-0203	NONE	NONE		OPEN	OPEN	BETWEEN CCT 2&3	BLACK
93050-0050	93049-0003	NONE	b c		OPEN	OPEN	None	BLUE
93050-0051	93049-0103	NONE	ALL		OPEN	OPEN	BETWEEN CCT 1&2	BLUE
93050-0052	93049-0083	NONE	a c		NARROW	OPEN	NONE	NONE
93050-0053	93049-0083	NONE	d		NARROW	OPEN	NONE	NONE
93050-0054	93049-0003	NONE	NONE		OPEN	OPEN	NONE	RED
93050-0055	93049-0103	NONE	ALL		OPEN	OPEN	BETWEEN CCT 1&2	NONE
93050-0056	93049-0203	NONE	ALL		OPEN	OPEN	BETWEEN CCT 2&3	NONE

3CCT CONTINUED ON NEXT SHEET

NOTES

1. ⊕ DENOTES TERMINAL VOIDED POSITION
   ⊕ DENOTES TERMINAL LOADED POSITION
   | DENOTES POLARIZING RIB POSITION
2. MOLEX HOUSING NO. FOR REFERENCE ONLY

QUALITY SYMBOLS: = 0 / = 0 / = 0 / = 0 / = 0 / = 0 / = 0

THIS DRAWING CONTAINS INFORMATION THAT IS PROPRIETARY TO MOLEX ELECTRONIC TECHNOLOGIES, LLC AND SHOULD NOT BE USED WITHOUT WRITTEN PERMISSION

NEW PART# ADDED 2017/07/31
EC NO: 120091 2017/09/07
DRWN: BODEA 2017/09/07
CHK'D: ZCRAMER
APPR: BRUTTLE
REV H

GENERAL TOLERANCES (UNLESS SPECIFIED)
ANGULAR TOL ± 0.5 °
4 PLACES ±
3 PLACES ± 0.05
2 PLACES ± 0.1
1 PLACE ± 0.2
0 PLACES ±
DRAFT WHERE APPLICABLE MUST REMAIN WITHIN DIMENSIONS

DIMENSION UNITS: mm
SCALE: 1:1
DRWN BY: CFISHER01 DATE: 2015/11/24
CHK'D BY: CMONAHAN DATE: 2016/01/19
APPR BY: MSHANAHAN DATE: 2016/01/20
DRAWING SIZE: A2
THIRD ANGLE PROJECTION

molex

APPLI-MATE 2.5 FEMALE G.W.T. 750 VERSION

PRODUCT CUSTOMER DRAWING

SERIES	MATERIAL NUMBER	CUSTOMER
93050	SEE SHEETS	GENERAL MARKET

DOCUMENT NUMBER	DOC TYPE	DOC PART	SHEET NUMBER
930500001	PSD	000	6 OF 17

RELEASE STATUS: P1 | RELEASE DATE: 07.09.2017 16:24:01

FORMAT: master-tb-prod-A2
REVISION: D
DATE: 2015/09/04

3 CIRCUIT

PART NUMBER	HOUSING USED	TERMINAL VOID POSITION	REMOVED POSITION KEYS	CONFIGURATION	FIRST ENDWALL	LAST ENDWALL	POLARIZING RIB BETWEEN	COLOUR STRIPE
93050-0057	93049-0123	NONE	NONE	1 2 3	CLOSED	CLOSED	BETWEEN CCT 1&2	NONE
93050-0058	93049-0003	NONE	NONE	1 2 3	OPEN	OPEN	NONE	PURPLE
93050-0059	93049-0003	NONE	NONE	1 2 3	OPEN	OPEN	NONE	GREEN
93050-0060	93049-0123	NONE	NONE	1 2 3	CLOSED	CLOSED	BETWEEN CCT 1&2	BLACK
93050-0061	93049-0003	NONE	ALL	a b c d 1 2 3	OPEN	OPEN	NONE	BLUE
93050-0062	93049-0103	NONE	a d	a d 1 2 3	OPEN	OPEN	BETWEEN CCT 1&2	NONE
93050-0063	93049-0243	NONE	NONE	1 2 3	OPEN	CLOSED	BETWEEN CCT 2&3	NONE

4 CIRCUIT

PART NUMBER	HOUSING USED	TERMINAL VOID POSITION	REMOVED POSITION KEYS	CONFIGURATION	FIRST ENDWALL	LAST ENDWALL	POLARIZING RIB BETWEEN	COLOUR STRIPE
93050-0501	93049-0004	NONE	NONE	1 2 3 4	OPEN	OPEN	NONE	NONE
93050-0502	93049-0104	NONE	a b d e	a b d e 1 2 3 4	OPEN	OPEN	BETWEEN CCT 1&2	NONE
93050-0503	93049-0304	NONE	ALL	a b c d e 1 2 3 4	OPEN	OPEN	BETWEEN CCT 3&4	NONE
93050-0504	93049-0304	NONE	ALL	a b c d e 1 2 3 4	OPEN	OPEN	BETWEEN CCT 3&4	BLUE
93050-0505	93049-0004	NONE	c e	c e 1 2 3 4	OPEN	OPEN	NONE	NONE
93050-0506	93049-0004	NONE	b c	b c 1 2 3 4	OPEN	OPEN	NONE	NONE
93050-0507	93049-0204	NONE	NONE	1 2 3 4	OPEN	OPEN	BETWEEN CCT 2&3	NONE
93050-0508	93049-0004	NONE	a d e	a d e 1 2 3 4	OPEN	OPEN	NONE	NONE
93050-0509	93049-0004	NONE	a c	a c 1 2 3 4	OPEN	OPEN	NONE	NONE
93050-0751	93049-0064	NONE	b e	b e 1 2 3 4	CLOSED	OPEN	NONE	NONE
93050-0510	93049-0004	NONE	b d	b d 1 2 3 4	OPEN	OPEN	NONE	NONE
93050-0511	93049-0004	NONE	b e	b e 1 2 3 4	OPEN	OPEN	NONE	NONE
93050-0512	93049-0004	NONE	NONE	1 2 3 4	OPEN	OPEN	NONE	BLUE
93050-0752	93049-0064	NONE	NONE	1 2 3 4	CLOSED	OPEN	NONE	NONE
93050-0514	93049-0004	NONE	c d	c d 1 2 3 4	OPEN	OPEN	NONE	NONE
93050-0753	93049-0064	NONE	a b d	a b d 1 2 3 4	CLOSED	OPEN	NONE	NONE
93050-0515	93049-0004	NONE	b c	b c 1 2 3 4	OPEN	OPEN	NONE	RED
93050-0516	93049-0004	NONE	d	d 1 2 3 4	OPEN	OPEN	NONE	BLUE
93050-0517	93049-0004	NONE	b d e	b d e 1 2 3 4	OPEN	OPEN	NONE	BLUE
93050-0518	93049-0004	NONE	a c e	a c e 1 2 3 4	OPEN	OPEN	NONE	NONE
93050-0519	93049-0004	NONE	a b	a b 1 2 3 4	OPEN	OPEN	NONE	NONE
93050-0520	93049-0004	NONE	a d	a d 1 2 3 4	OPEN	OPEN	NONE	NONE
93050-0521	93049-0004	NONE	a c d	a c d 1 2 3 4	OPEN	OPEN	NONE	NONE
93050-0522	93049-0004	NONE	d e	d e 1 2 3 4	OPEN	OPEN	NONE	NONE

4CCT CONTINUED ON NEXT SHEET

NOTES

1. + DENOTES TERMINAL VOIDED POSITION
   ⊕ DENOTES TERMINAL LOADED POSITION
   | DENOTES POLARIZING RIB POSITION
2. MOLEX HOUSING NO. FOR REFERENCE ONLY

QUALITY SYMBOLS

E A	= 0
E C	= 0
E P	= 0
▼	= 0
▽	= 0
⊠	= 0
■	= 0
▽	= 0

THIS DRAWING CONTAINS INFORMATION THAT IS PROPRIETARY TO MOLEX ELECTRONIC TECHNOLOGIES, LLC AND SHOULD NOT BE USED WITHOUT WRITTEN PERMISSION

NEW PART# ADDED 2017/07/31
EC NO: 120091 2017/09/07
DRWN: BODEA 2017/09/07
CHK'D: ZCRAMER
APPR: BRUTTLE

REV: H

GENERAL TOLERANCES (UNLESS SPECIFIED)

ANGULAR TOL	±	0.5 °
4 PLACES	±	
3 PLACES	±	0.05
2 PLACES	±	0.1
1 PLACE	±	0.2
0 PLACES	±	

DRAFT WHERE APPLICABLE MUST REMAIN WITHIN DIMENSIONS

DIMENSION UNITS: mm
SCALE: 1:1
DRWN BY: CFISHER01 DATE: 2015/11/24
CHK'D BY: CMONAHAN DATE: 2016/01/19
APPR BY: MSHANAHAN DATE: 2016/01/20
DRAWING SIZE: A2
THIRD ANGLE PROJECTION

molex

APPLI-MATE 2.5 FEMALE G.W.T. 750 VERSION

PRODUCT CUSTOMER DRAWING

SERIES	MATERIAL NUMBER	CUSTOMER
93050	SEE SHEETS	GENERAL MARKET

DOCUMENT NUMBER	DOC TYPE	DOC PART	SHEET NUMBER
930500001	PSD	000	7 OF 17

RELEASE STATUS	P1	RELEASE DATE	07.09.2017 16:24:01

FORMAT: master-tb-prod-A2
REVISION: 20
DATE: 2015/09/04

4 CIRCUIT

PART NUMBER	HOUSING USED	TERMINAL VOID POSITION	REMOVED POSITION KEYS	CONFIGURATION	FIRST ENDWALL	LAST ENDWALL	POLARIZING RIB BETWEEN	COLOUR STRIPE
93050-0523	93049-0044	NONE	NONE	⊕⊕⊕⊕ 1 2 3 4	OPEN	CLOSED	NONE	NONE
93050-0524	93049-0324	NONE	NONE	⊕⊕⊕⊕ 1 2 3 4	CLOSED	CLOSED	BETWEEN CCT 3&4	NONE
93050-0525	93049-0004	CCT 2	b c	b c ⊕+⊕⊕ 1 2 3 4	OPEN	OPEN	NONE	NONE
93050-0526	93049-0004	CCT 2	a d	a d ⊕+⊕⊕ 1 2 4	OPEN	OPEN	NONE	NONE
93050-0527	93049-0004	NONE	c e	c e ⊕⊕⊕⊕ 1 2 3 4	OPEN	OPEN	NONE	NONE
93050-0528	93049-0004	CCT 2	d e	d e ⊕+⊕⊕ 1 2 3 4	OPEN	OPEN	NONE	NONE
93050-0529	93049-0004	NONE	b c d	b c d ⊕⊕⊕⊕ 1 2 3 4	OPEN	OPEN	NONE	NONE
93050-0530	93049-0004	NONE	c	c ⊕⊕⊕⊕ 1 2 3 4	OPEN	OPEN	NONE	NONE
93050-0532	93049-0024	NONE	NONE	⊕⊕⊕⊕ 1 2 3 4	CLOSED	CLOSED	NONE	NONE
93050-0533	93049-0104	NONE	NONE	⊕|⊕⊕⊕ 1|2 3 4	OPEN	OPEN	BETWEEN CCT 1&2	NONE
93050-0534	93049-0084	NONE	NONE	⊕⊕⊕⊕ 1 2 3 4	NARROW	OPEN	NONE	NONE
93050-0535	93049-0304	NONE	NONE	⊕⊕⊕⊕ 1 2 3|4	OPEN	OPEN	BETWEEN CCT 3&4	BLACK
93050-0536	93049-0044	NONE	b	b ⊕⊕⊕⊕ 1 2 3 4	OPEN	CLOSED	NONE	NONE
93050-0537	93049-0304	NONE	b c e	b c e ⊕⊕⊕⊕ 1 2 3|4	OPEN	OPEN	BETWEEN CCT 3&4	BLUE
93050-0538	93049-0004	NONE	a b d	a b d ⊕⊕⊕⊕ 1 2 3 4	OPEN	OPEN	NONE	NONE
93050-0540	93049-0064	NONE	b	b ⊕⊕⊕⊕ 1 2 3 4	CLOSED	OPEN	NONE	NONE
93050-0541	93049-0004	NONE	b	b ⊕⊕⊕⊕ 1 2 3 4	OPEN	OPEN	NONE	NONE
93050-0542	93049-0304	NONE	NONE	⊕⊕⊕⊕ 1 2 3|4	OPEN	OPEN	BETWEEN CCT 3&4	NONE
93050-0543	93049-0064	NONE	a e	a e ⊕⊕⊕⊕ 1 2 3 4	CLOSED	OPEN	NONE	NONE
93050-0544	93049-0084	NONE	a e	a e ⊕⊕⊕⊕ 1 2 3 4	NARROW	OPEN	NONE	NONE
93050-0545	93049-9901	NONE	a e	a e ⊕⊕⊕⊕ 1 2 3 4	NARROW FLUSH	OPEN	NONE	NONE
93050-0546	93049-9901	NONE	NONE	⊕⊕⊕⊕ 1 2 3 4	NARROW FLUSH	OPEN	NONE	NONE
93050-0547	93049-0004	CCT 1,2	NONE	++⊕⊕ 1 2 3 4	OPEN	OPEN	NONE	NONE
93050-0548	93049-0004	NONE	a c	a c ⊕⊕⊕⊕ 1 2 3 4	OPEN	OPEN	NONE	RED
93050-0549	93049-0004	NONE	NONE	⊕⊕⊕⊕ 1 2 3 4	OPEN	OPEN	NONE	RED
93050-0550	93049-0424	NONE	NONE	⊕⊕⊕⊕ 1 2 3|4	CLOSED	CLOSED	BETWEEN CCT 3&4	BLACK
93050-0551	93049-0004	NONE	a b c	a b c ⊕⊕⊕⊕ 1 2 3 4	OPEN	OPEN	NONE	NONE
93050-0552	93049-0084	NONE	NONE	⊕⊕⊕⊕ 1 2 3 4	NARROW	OPEN	NONE	RED
93050-0553	93049-0224	NONE	NONE	⊕⊕⊕⊕ 1|2 3 4	CLOSED	CLOSED	BETWEEN CCT 2&3	NONE

4 CIRCUIT

PART NUMBER	HOUSING USED	TERMINAL VOID POSITION	REMOVED POSITION KEYS	CONFIGURATION	FIRST ENDWALL	LAST ENDWALL	POLARIZING RIB BETWEEN	COLOUR STRIPE
93050-0554	93049-0124	NONE	NONE	⊕⊕⊕⊕ 1|2 3 4	CLOSED	CLOSED	BETWEEN CCT 1&2	NONE
93050-0555	93049-0004	NONE	b c d	b c d ⊕⊕⊕⊕ 1 2 3 4	OPEN	OPEN	NONE	RED
93050-0556	93049-0004	NONE	c d	c d ⊕⊕⊕⊕ 1 2 3 4	OPEN	OPEN	NONE	BLUE
93050-0557	93049-0004	NONE	b e	b e ⊕⊕⊕⊕ 1 2 3 4	OPEN	OPEN	NONE	BLUE
93050-0558	93049-0004	NONE	b	b ⊕⊕⊕⊕ 1 2 3 4	OPEN	OPEN	NONE	BLUE
93050-0559	93049-0004	NONE	a e	a e ⊕⊕⊕⊕ 1 2 3 4	OPEN	OPEN	NONE	NONE
93050-0560	93049-0004	NONE	b d e	b d e ⊕⊕⊕⊕ 1 2 3 4	OPEN	OPEN	NONE	NONE

NOTES

1. + DENOTES TERMINAL VOIDED POSITION
   ⊕ DENOTES TERMINAL LOADED POSITION
   | DENOTES POLARIZING RIB POSITION
2. MOLEX HOUSING NO. FOR REFERENCE ONLY

QUALITY SYMBOLS: A = 0; B = 0; C = 0; ▼ = 0; D = 0; ☒ = 0; ■ = 0; E = 0

NEW PART# ADDED — 2017/07/31; 2017/09/07; 2017/09/07

EC NO: 120091
DRWN: BODEA
CHK'D: ZCRAMER
APPR: BRUTTLE

REV: H

THIS DRAWING CONTAINS INFORMATION THAT IS PROPRIETARY TO MOLEX ELECTRONIC TECHNOLOGIES, LLC AND SHOULD NOT BE USED WITHOUT WRITTEN PERMISSION

GENERAL TOLERANCES (UNLESS SPECIFIED)
ANGULAR TOL ± 0.5 °
4 PLACES ±
3 PLACES ± 0.05
2 PLACES ± 0.1
1 PLACE ± 0.2
0 PLACES ±
DRAFT WHERE APPLICABLE MUST REMAIN WITHIN DIMENSIONS

DIMENSION UNITS: mm
SCALE: 1:1
DRWN BY: CFISHER01 DATE: 2015/11/24
CHK'D BY: CMONAHAN DATE: 2016/01/19
APPR BY: MSHANAHAN DATE: 2016/01/20
DRAWING SIZE: A2
THIRD ANGLE PROJECTION

molex

APPLI-MATE 2.5 FEMALE G.W.T. 750 VERSION

PRODUCT CUSTOMER DRAWING

SERIES	MATERIAL NUMBER	CUSTOMER
93050	SEE SHEETS	GENERAL MARKET

DOCUMENT NUMBER	DOC TYPE	DOC PART	SHEET NUMBER
930500001	PSD	000	8 OF 17

RELEASE STATUS	P1	RELEASE DATE	07.09.2017	16:24:01

FORMAT: master-tb-prod-A2
REVISION: D
DATE: 2015/09/04

5 CIRCUIT

PART NUMBER	HOUSING USED	TERMINAL VOID POSITION	REMOVED POSITION KEYS	CONFIGURATION	FIRST ENDWALL	LAST ENDWALL	POLARIZING RIB BETWEEN	COLOUR STRIPE
93050-1001	93049-0005	NONE	NONE	⊕⊕⊕⊕⊕	OPEN	OPEN	NONE	NONE
93050-1002	93049-0005	NONE	c d e	⊕⊕⊕⊕⊕	OPEN	OPEN	NONE	NONE
93050-1003	93049-0205	NONE	NONE	⊕⊕|⊕⊕⊕	OPEN	OPEN	BETWEEN CCT 2&3	NONE
93050-1004	93049-0005	NONE	c d	⊕⊕⊕⊕⊕	OPEN	OPEN	NONE	NONE
93050-1005	93049-0005	CCT 2,3,4	e	⊕+++⊕	OPEN	OPEN	NONE	NONE
93050-1006	93049-0005	CCT 1,2,4	b c d e	++⊕+⊕	OPEN	OPEN	NONE	NONE
93050-1007	93049-0005	CCT 4	a f	⊕⊕⊕+⊕	OPEN	OPEN	NONE	NONE
93050-1008	93049-0005	NONE	d	⊕⊕⊕⊕⊕	OPEN	OPEN	NONE	NONE
93050-1009	93049-0005	CCT 2,4	NONE	⊕+⊕+⊕	OPEN	OPEN	NONE	NONE
93050-1010	93049-0005	NONE	ALL	⊕⊕⊕⊕⊕	OPEN	OPEN	NONE	NONE
93050-1011	93049-0005	CCT 1,2,4	NONE	++⊕+⊕	OPEN	OPEN	NONE	NONE
93050-1012	93049-0005	CCT 2,3,4	NONE	⊕+++⊕	OPEN	OPEN	NONE	NONE
93050-1013	93049-0005	NONE	a	⊕⊕⊕⊕⊕	OPEN	OPEN	NONE	NONE
93050-1014	93049-0105	NONE	NONE	⊕|⊕⊕⊕⊕	OPEN	OPEN	BETWEEN CCT 1&2	NONE
93050-1015	93049-0425	NONE	NONE	⊕⊕⊕⊕|⊕	CLOSED	CLOSED	BETWEEN CCT 4&5	NONE
93050-1016	93049-0005	CCT 4	NONE	⊕⊕⊕+⊕	OPEN	OPEN	NONE	NONE
93050-1017	93049-0005	NONE	a b d e f	⊕⊕⊕⊕⊕	OPEN	OPEN	NONE	NONE
93050-1018	93049-0005	NONE	b c d	⊕⊕⊕⊕⊕	OPEN	OPEN	NONE	NONE
93050-1019	93049-0005	CCT 1,2,4	a b c d e f	++⊕+⊕	OPEN	OPEN	NONE	BLUE
93050-1020	93049-0005	CCT 2,3,4	a b c d e f	⊕+++⊕	OPEN	OPEN	NONE	NONE
93050-1021	93049-0005	CCT 1,2,4	a d e f	++⊕+⊕	OPEN	OPEN	NONE	NONE
93050-1022	93049-0005	CCT 4,5	NONE	⊕⊕⊕++	OPEN	OPEN	NONE	NONE
93050-1023	93049-0005	CCT 5	NONE	⊕⊕⊕⊕+	OPEN	OPEN	NONE	NONE
93050-1024	93049-0305	NONE	NONE	⊕⊕⊕|⊕⊕	OPEN	OPEN	BETWEEN CCT 3&4	BLUE
93050-1025	93049-0005	CCT 2,4	NONE	⊕+⊕+⊕	OPEN	OPEN	NONE	GREEN
93050-1026	93049-0005	CCT 2,3,4	a b c e f	⊕+++⊕	OPEN	OPEN	NONE	NONE
93050-1027	93049-0005	NONE	b c d e	⊕⊕⊕⊕⊕	OPEN	OPEN	NONE	NONE
93050-1028	93049-0305	NONE	NONE	⊕⊕⊕|⊕⊕	OPEN	OPEN	BETWEEN CCT 3&4	GREEN
93050-1029	93049-0105	NONE	ALL	⊕|⊕⊕⊕⊕	OPEN	OPEN	BETWEEN CCT 1&2	NONE
93050-1030	93049-0005	CCT 4	c d e	⊕⊕⊕+⊕	OPEN	OPEN	NONE	NONE

5 CIRCUIT

PART NUMBER	HOUSING USED	TERMINAL VOID POSITION	REMOVED POSITION KEYS	CONFIGURATION	FIRST ENDWALL	LAST ENDWALL	POLARIZING RIB BETWEEN	COLOUR STRIPE
93050-1031	93049-0005	CCT 2,3,4	a d e f	⊕+++⊕	OPEN	OPEN	NONE	NONE
93050-1032	93049-0405	NONE	NONE	⊕⊕⊕⊕|⊕	OPEN	OPEN	BETWEEN CCT 4&5	BROWN
93050-1033	93049-0005	CCT 2,3,4	a b d e f	⊕+++⊕	OPEN	OPEN	NONE	NONE
93050-1034	93049-0005	CCT 2,3,4	b	⊕+++⊕	OPEN	OPEN	NONE	NONE
93050-1035	93049-0005	NONE	a b d e	⊕⊕⊕⊕⊕	OPEN	OPEN	NONE	NONE
93050-1036	93049-0405	NONE	a c f	⊕⊕⊕⊕|⊕	OPEN	OPEN	BETWEEN CCT 4&5	NONE
93050-1037	93049-0005	NONE	b e	⊕⊕⊕⊕⊕	OPEN	OPEN	NONE	RED
93050-1038	93049-0005	NONE	NONE	⊕⊕⊕⊕⊕	OPEN	OPEN	NONE	RED
93050-1039	93049-0005	NONE	a f	⊕⊕⊕⊕⊕	OPEN	OPEN	NONE	NONE
93050-1040	93049-0405	NONE	NONE	⊕⊕⊕⊕|⊕	OPEN	OPEN	BETWEEN CCT 4&5	NONE
93050-1041	93049-0025	NONE	NONE	⊕⊕⊕⊕⊕	CLOSED	CLOSED	NONE	NONE
93050-1042	93049-0005	NONE	a c f	⊕⊕⊕⊕⊕	OPEN	OPEN	NONE	NONE
93050-1043	93049-0005	NONE	b d e	⊕⊕⊕⊕⊕	OPEN	OPEN	NONE	NONE
93050-1044	93049-0005	NONE	b d	⊕⊕⊕⊕⊕	OPEN	OPEN	NONE	NONE
93050-1045	93049-0005	NONE	a d e	⊕⊕⊕⊕⊕	OPEN	OPEN	NONE	NONE
93050-1046	93049-0005	NONE	a d f	⊕⊕⊕⊕⊕	OPEN	OPEN	NONE	RED
93050-1047	93049-9902	NONE	NONE	⊕⊕⊕⊕⊕	NARROW FLUSH	NARROW FLUSH	NONE	NONE
93050-1048	93049-0005	CCT 2,3,4	c d f	⊕+++⊕	OPEN	OPEN	NONE	NONE
93050-1049	93049-0005	CCT 2,3,4	a b c	⊕+++⊕	OPEN	OPEN	NONE	NONE
93050-1050	93049-0005	NONE	a d e f	⊕⊕⊕⊕⊕	OPEN	OPEN	NONE	NONE
93050-1051	93049-0005	NONE	a c d e	⊕⊕⊕⊕⊕	OPEN	OPEN	NONE	NONE
93050-1052	93049-0005	NONE	NONE	⊕⊕⊕⊕⊕	OPEN	OPEN	NONE	BLACK
93050-1053	93049-0405	NONE	NONE	⊕⊕⊕⊕|⊕	OPEN	OPEN	BETWEEN CCT 4&5	BLUE
93050-1054	93049-0125	NONE	NONE	⊕|⊕⊕⊕⊕	CLOSED	CLOSED	BETWEEN CCT 1&2	NONE

5CCT CONTINUED ON NEXT SHEET

NOTES

1. + DENOTES TERMINAL VOIDED POSITION
   ⊕ DENOTES TERMINAL LOADED POSITION
   | DENOTES POLARIZING RIB POSITION
2. MOLEX HOUSING NO. FOR REFERENCE ONLY

QUALITY SYMBOLS: E A = 0; E F = 0; E P = 0; ▼ = 0; ▽ = 0; ☒ = 0; ■ = 0; ▽ = 0

NEW PART# ADDED — EC NO: 120091 — DRWN: BODEA — CHK'D: ZCRAMER — APPR: BRUTTLE — 2017/07/31 — 2017/09/07 — 2017/09/07

H — REV

THIS DRAWING CONTAINS INFORMATION THAT IS PROPRIETARY TO MOLEX ELECTRONIC TECHNOLOGIES, LLC AND SHOULD NOT BE USED WITHOUT WRITTEN PERMISSION

GENERAL TOLERANCES (UNLESS SPECIFIED)

ANGULAR TOL ± 0.5 °	
4 PLACES	±
3 PLACES	± 0.05
2 PLACES	± 0.1
1 PLACE	± 0.2
0 PLACES	±

DRAFT WHERE APPLICABLE MUST REMAIN WITHIN DIMENSIONS

DIMENSION UNITS: mm — SCALE: 1:1

DRWN BY: CFISHER01 — DATE: 2015/11/24

CHK'D BY: CMONAHAN — DATE: 2016/01/19

APPR BY: MSHANAHAN — DATE: 2016/01/20

DRAWING SIZE: A2 — THIRD ANGLE PROJECTION

molex

APPLI-MATE 2.5 FEMALE G.W.T. 750 VERSION

PRODUCT CUSTOMER DRAWING

SERIES	MATERIAL NUMBER	CUSTOMER
93050	SEE SHEETS	GENERAL MARKET

DOCUMENT NUMBER	DOC TYPE	DOC PART	SHEET NUMBER
930500001	PSD	000	9 OF 17

RELEASE STATUS: P1 — RELEASE DATE: 07.09.2017 16:24:01

FORMAT: master-tb-prod-A2
REVISION: D
DATE: 2015/09/04

5 CIRCUIT

PART NUMBER	HOUSING USED	TERMINAL VOID POSITION	REMOVED POSITION KEYS	CONFIGURATION	FIRST ENDWALL	LAST ENDWALL	POLARIZING RIB BETWEEN	COLOUR STRIPE
93050-1055	93049-0005	CCT 2,3,4	NONE	⊕+++⊕ 1 2 3 4 5	OPEN	OPEN	NONE	RED
93050-1056	93049-0005	NONE	a, c, d	a c d ⊕⊕⊕⊕⊕ 1 2 3 4 5	OPEN	OPEN	NONE	NONE
93050-1057	93049-0005	CCT 1, 2, 3	b, c, d	b c d +++⊕⊕ 1 2 3 4 5	OPEN	OPEN	NONE	NONE
93050-1058	93049-0225	NONE	NONE	⊕⊕|⊕⊕⊕ 1 2 3 4 5	CLOSED	CLOSED	2&3	NONE
93050-1059	93049-0005	CCT 2,3,4	a, b, c	a b c ⊕+++⊕ 1 2 3 4 5	OPEN	OPEN	NONE	GREEN
93050-1060	93049-0005	CCT 2,3,4	c, d, f	c d f ⊕+++⊕ 1 2 3 4 5	OPEN	OPEN	NONE	BLACK
93050-1061	93049-0205	NONE	NONE	⊕⊕⊕⊕⊕ 1 2	3 4 5	OPEN	OPEN	2&3 BROWN

6 CIRCUIT

PART NUMBER	HOUSING USED	TERMINAL VOID POSITION	REMOVED POSITION KEYS	CONFIGURATION	FIRST ENDWALL	LAST ENDWALL	POLARIZING RIB BETWEEN	COLOUR STRIPE
93050-1501	93049-0006	NONE	NONE	⊕⊕⊕⊕⊕⊕ 1 2 3 4 5 6	OPEN	OPEN	NONE	NONE
93050-1502	93049-0006	CCT 2,4	NONE	⊕+⊕+⊕⊕ 1 2 3 4 5 6	OPEN	OPEN	NONE	NONE
93050-1503	93049-0006	NONE	a d e f	a d e f ⊕⊕⊕⊕⊕⊕ 1 2 3 4 5 6	OPEN	OPEN	NONE	NONE
93050-1504	93049-0006	CCT 2, 5	b c d e g	b c d e g ⊕+⊕⊕+⊕ 1 2 3 4 5 6	OPEN	OPEN	NONE	NONE
93050-1505	93049-0006	NONE	b d e g	b d e g ⊕⊕⊕⊕⊕⊕ 1 2 3 4 5 6	OPEN	OPEN	NONE	NONE
93050-1506	93049-0006	NONE	g	g ⊕⊕⊕⊕⊕⊕ 1 2 3 4 5 6	OPEN	OPEN	NONE	NONE
93050-1507	93049-0006	NONE	b c d g	b c d g ⊕⊕⊕⊕⊕⊕ 1 2 3 4 5 6	OPEN	OPEN	NONE	NONE
93050-1508	93049-0006	NONE	b c e	b c e ⊕⊕⊕⊕⊕⊕ 1 2 3 4 5 6	OPEN	OPEN	NONE	NONE
93050-1509	93049-0006	NONE	b c d e f	b c d e f ⊕⊕⊕⊕⊕⊕ 1 2 3 4 5 6	OPEN	OPEN	NONE	NONE
93050-1510	93049-0006	CCT 3, 5	NONE	⊕⊕+⊕+⊕ 1 2 3 4 5 6	OPEN	OPEN	NONE	NONE
93050-1511	93049-0006	CCT 4	b c	b c ⊕⊕⊕+⊕⊕ 1 2 3 4 5 6	OPEN	OPEN	NONE	NONE
93050-1512	93049-0006	CCT 2,4	b d e f	b d e f ⊕+⊕+⊕⊕ 1 2 3 4 5 6	OPEN	OPEN	NONE	BLUE
93050-1513	93049-0406	CCT 2,4	NONE	⊕+⊕+|⊕⊕ 1 2 3 4 5 6	OPEN	OPEN	BETWEEN CCT 4&5	NONE
93050-1514	93049-0006	NONE	d e f g	d e f g ⊕⊕⊕⊕⊕⊕ 1 2 3 4 5 6	OPEN	OPEN	NONE	NONE
93050-1515	93049-0006	NONE	a d	a d ⊕⊕⊕⊕⊕⊕ 1 2 3 4 5 6	OPEN	OPEN	NONE	NONE
93050-1516	93049-0006	NONE	b e f	b e f ⊕⊕⊕⊕⊕⊕ 1 2 3 4 5 6	OPEN	OPEN	NONE	NONE
93050-1517	93049-0006	NONE	c d e	c d e ⊕⊕⊕⊕⊕⊕ 1 2 3 4 5 6	OPEN	OPEN	NONE	NONE
93050-1518	93049-0006	CCT 1,3	b d e g	b d e g +⊕+⊕⊕⊕ 1 2 3 4 5 6	OPEN	OPEN	NONE	NONE
93050-1520	93049-0006	CCT 2, 5	c e	c e ⊕+⊕⊕+⊕ 1 2 3 4 5 6	OPEN	OPEN	NONE	NONE
93050-1521	93049-0006	NONE	c e	c e ⊕⊕⊕⊕⊕⊕ 1 2 3 4 5 6	OPEN	OPEN	NONE	NONE
93050-1522	93049-0006	NONE	d e	d e ⊕⊕⊕⊕⊕⊕ 1 2 3 4 5 6	OPEN	OPEN	NONE	NONE
93050-1523	93049-0006	NONE	b d	b d ⊕⊕⊕⊕⊕⊕ 1 2 3 4 5 6	OPEN	OPEN	NONE	NONE
93050-1524	93049-0006	NONE	a c	a c ⊕⊕⊕⊕⊕⊕ 1 2 3 4 5 6	OPEN	OPEN	NONE	NONE
93050-1525	93049-0006	CCT 2, 5	NONE	⊕+⊕⊕+⊕ 1 2 3 4 5 6	OPEN	OPEN	NONE	RED

6CCT CONTINUED ON NEXT SHEET

NOTES

1. + DENOTES TERMINAL VOIDED POSITION
   ⊕ DENOTES TERMINAL LOADED POSITION
   | DENOTES POLARIZING RIB POSITION
2. MOLEX HOUSING NO. FOR REFERENCE ONLY

QUALITY SYMBOLS: E/A = 0; E/C = 0; E/D = 0; ▼ = 0; C = 0; ☒ = 0; ■ = 0; ▽ = 0

NEW PART# ADDED — EC NO: 120091 2017/07/31; DRWN: BODEA 2017/09/07; CHK'D: ZCRAMER 2017/09/07; APPR: BRUTTLE 2017/09/07

REV: H

GENERAL TOLERANCES (UNLESS SPECIFIED): ANGULAR TOL ± 0.5 °; 4 PLACES ±; 3 PLACES ± 0.05; 2 PLACES ± 0.1; 1 PLACE ± 0.2; 0 PLACES ±

DRAFT WHERE APPLICABLE MUST REMAIN WITHIN DIMENSIONS

THIS DRAWING CONTAINS INFORMATION THAT IS PROPRIETARY TO MOLEX ELECTRONIC TECHNOLOGIES, LLC AND SHOULD NOT BE USED WITHOUT WRITTEN PERMISSION

DIMENSION UNITS: mm — SCALE: 1:1

DRWN BY: CFISHER01 — DATE: 2015/11/24

CHK'D BY: CMONAHAN — DATE: 2016/01/19

APPR BY: MSHANAHAN — DATE: 2016/01/20

DRAWING SIZE: A2 — THIRD ANGLE PROJECTION

molex

APPLI-MATE 2.5 FEMALE G.W.T. 750 VERSION

PRODUCT CUSTOMER DRAWING

SERIES	MATERIAL NUMBER	CUSTOMER
93050	SEE SHEETS	GENERAL MARKET

DOCUMENT NUMBER	DOC TYPE	DOC PART	SHEET NUMBER
930500001	PSD	000	10 OF 17

RELEASE STATUS	P1	RELEASE DATE	07.09.2017 16:24:01

FORMAT: molex-tb-prod-A2
REVISION: D
DATE: 2015/09/04

6 CIRCUIT

PART NUMBER	HOUSING USED	TERMINAL VOID POSITION	REMOVED POSITION KEYS	CONFIGURATION	FIRST ENDWALL	LAST ENDWALL	POLARIZING RIB BETWEEN	COLOUR STRIPE
93050-1526	93049-0006	NONE	c d	□□ c d □□ ⊕⊕⊕⊕⊕⊕ 1 2 3 4 5 6	OPEN	OPEN	NONE	NONE
93050-1527	93049-0006	CCT 1,2,3,4	NONE	□□□□□□ + + + + ⊕ ⊕ 1 2 3 4 5 6	OPEN	OPEN	NONE	NONE
93050-1528	93049-0006	NONE	c e f g	□□ c □ e f g ⊕⊕⊕⊕⊕⊕ 1 2 3 4 5 6	OPEN	OPEN	NONE	NONE
93050-1529	93049-0006	NONE	f	□□□□□ f ⊕⊕⊕⊕⊕⊕ 1 2 3 4 5 6	OPEN	OPEN	NONE	NONE
93050-1530	93049-0026	NONE	NONE	□□□□□□ ⊕⊕⊕⊕⊕⊕ 1 2 3 4 5 6	CLOSED	CLOSED	NONE	NONE
93050-1531	93049-0006	CCT 2, 5	b d	□ b □ d □□ ⊕ + ⊕ ⊕ + ⊕ 1 2 3 4 5 6	OPEN	OPEN	NONE	NONE
93050-1532	93049-0006	CCT 2,4	d e	□□□ d e □□ ⊕ + ⊕ + ⊕ ⊕ 1 2 3 4 5 6	OPEN	OPEN	NONE	NONE
93050-1533	93049-1426	NONE	NONE	□□□□□□ ⊕ ⊕ ⊕ ⊕ ⊕ ⊕ 1 | 2 3 4 5 6	CLOSED	CLOSED	BETWEEN CCT 1&2 2&3	NONE
93050-1534	93049-0106	NONE	NONE	□□□□□□ ⊕ ⊕ ⊕ ⊕ ⊕ ⊕ 1 | 2 3 4 5 6	OPEN	OPEN	BETWEEN CCT 1&2	BLACK
93050-1535	93049-0226	NONE	ALL	a b c d e f g ⊕ ⊕ ⊕ ⊕ ⊕ ⊕ 1 2 | 3 4 5 6	CLOSED	CLOSED	BETWEEN CCT 2&3	NONE
93050-1536	93049-0526	NONE	NONE	□□□□□□ ⊕ ⊕ ⊕ ⊕ ⊕ ⊕ 1 2 3 4 5 | 6	CLOSED	CLOSED	BETWEEN CCT 5&6	NONE
93050-1538	93049-0006	NONE	e f	□□□□ e f □ ⊕⊕⊕⊕⊕⊕ 1 2 3 4 5 6	OPEN	OPEN	NONE	NONE
93050-1539	93049-0006	CCT 3, 5	NONE	□□□□□□ ⊕ ⊕ + ⊕ + ⊕ 1 2 3 4 5 6	OPEN	OPEN	NONE	BLUE
93050-1540	93049-0006	CCT 2,4	a b f g	a b □□□ f g ⊕ + ⊕ + ⊕ ⊕ 1 2 3 4 5 6	OPEN	OPEN	NONE	BLUE
93050-1541	93049-0006	CCT 1,2,3,4	a b f g	a b □□□ f g + + + + ⊕ ⊕ 1 2 3 4 5 6	OPEN	OPEN	NONE	NONE
93050-1542	93049-0006	CCT 4,5,6	a b c f	a b c □□ f □ ⊕ ⊕ ⊕ + + + 1 2 3 4 5 6	OPEN	OPEN	NONE	NONE
93050-1543	93049-0006	CCT 2, 5	NONE	□□□□□□ ⊕ + ⊕ ⊕ + ⊕ 1 2 3 4 5 6	OPEN	OPEN	NONE	NONE
93050-1544	93049-0066	NONE	NONE	□□□□□□ ⊕⊕⊕⊕⊕⊕ 1 2 3 4 5 6	CLOSED	OPEN	NONE	NONE
93050-1545	93049-0006	NONE	d f	□□□ d □ f □ ⊕⊕⊕⊕⊕⊕ 1 2 3 4 5 6	OPEN	OPEN	NONE	NONE
93050-1546	93049-0006	NONE	c e g	□□ c □ e □ g ⊕⊕⊕⊕⊕⊕ 1 2 3 4 5 6	OPEN	OPEN	NONE	NONE
93050-1547	93049-0306	NONE	a b g	a b □□□□ g ⊕⊕⊕⊕⊕⊕ 1 2 3 | 4 5 6	OPEN	OPEN	BETWEEN CCT 3&4	BLUE
93050-1548	93049-0006	CCT 4,5,6	b c f	□ b c □□ f □ ⊕ ⊕ ⊕ + + + 1 2 3 4 5 6	OPEN	OPEN	NONE	NONE
93050-1549	93049-0026	CCT 2, 5	NONE	□□□□□□ ⊕ + ⊕ ⊕ + ⊕ 1 2 3 4 5 6	CLOSED	CLOSED	NONE	NONE
93050-1550	93049-0026	NONE	c d	□□ c d □□□ ⊕⊕⊕⊕⊕⊕ 1 2 3 4 5 6	CLOSED	CLOSED	NONE	NONE
93050-1551	93049-0206	NONE	NONE	□□□□□□ ⊕ ⊕ ⊕ ⊕ ⊕ ⊕ 1 2 | 3 4 5 6	OPEN	OPEN	BETWEEN CCT 2&3	NONE
93050-1552	93049-0206	NONE	NONE	□□□□□□ ⊕ ⊕ ⊕ ⊕ ⊕ ⊕ 1 2 | 3 4 5 6	OPEN	OPEN	BETWEEN CCT 2&3	RED
93050-1553	93049-0006	CCT 3, 5	c d e	□□ c d e □□ ⊕ ⊕ + ⊕ + ⊕ 1 2 3 4 5 6	OPEN	OPEN	NONE	NONE
93050-1554	93049-0006	NONE	b f g	□ b □□□ f g ⊕⊕⊕⊕⊕⊕ 1 2 3 4 5 6	OPEN	OPEN	NONE	NONE
93050-1555	REPLACE BY 93050-1509							
93050-1556	93049-0426	NONE	NONE	□□□□□□ ⊕ ⊕ ⊕ ⊕ ⊕ ⊕ 1 2 3 4 | 5 6	CLOSED	CLOSED	BETWEEN CCT 4&5	BROWN

6 CIRCUIT

PART NUMBER	HOUSING USED	TERMINAL VOID POSITION	REMOVED POSITION KEYS	CONFIGURATION	FIRST ENDWALL	LAST ENDWALL	POLARIZING RIB BETWEEN	COLOUR STRIPE
93050-1557	93049-0006	NONE	c f	□□ c □□ f □ ⊕⊕⊕⊕⊕⊕ 1 2 3 4 5 6	OPEN	OPEN	NONE	NONE
93050-1558	93049-0006	CCT 2, 5	d f	□□□ d □ f □ ⊕ + ⊕ ⊕ + ⊕ 1 2 3 4 5 6	OPEN	OPEN	NONE	NONE
93050-1559	93049-0006	CCT 2,4	d e	□□□ d e □□ ⊕ + ⊕ + ⊕ ⊕ 1 2 3 4 5 6	OPEN	OPEN	NONE	GREEN
93050-1560	93049-0086	CCT 2, 5	NONE	□□□□□□ ⊕ + ⊕ ⊕ + ⊕ 1 2 3 4 5 6	NARROW	OPEN	NONE	NONE
93050-1561	93049-0046	CCT 2, 5	NONE	□□□□□□ ⊕ + ⊕ ⊕ + ⊕ 1 2 3 4 5 6	OPEN	CLOSED	NONE	NONE
93050-1562	93049-0046	NONE	c d	□□ c d □□□ ⊕⊕⊕⊕⊕⊕ 1 2 3 4 5 6	OPEN	CLOSED	NONE	NONE
93050-1563	93049-0006	NONE	b d f	□ b □ d □ f □ ⊕⊕⊕⊕⊕⊕ 1 2 3 4 5 6	OPEN	OPEN	NONE	BLUE
93050-1564	93049-0006	NONE	NONE	□□□□□□ ⊕⊕⊕⊕⊕⊕ 1 2 3 4 5 6	OPEN	OPEN	NONE	BLUE
93050-1565	93049-0266	NONE	NONE	□□□□□□ ⊕ ⊕ ⊕ ⊕ ⊕ ⊕ 1 2 | 3 4 5 6	CLOSED	OPEN	BETWEEN CCT 2&3	BLUE
93050-1566	93049-0426	NONE	NONE	□□□□□□ ⊕ ⊕ ⊕ ⊕ ⊕ ⊕ 1 2 3 4 | 5 6	CLOSED	CLOSED	BETWEEN CCT 4&5	NONE
93050-1567	93049-0006	NONE	a b f g	a b □□□ f g ⊕⊕⊕⊕⊕⊕ 1 2 3 4 5 6	OPEN	OPEN	NONE	BLUE
93050-1568	93049-1506	NONE	c f	□□ c □□ f □ ⊕ ⊕ ⊕ ⊕ ⊕ ⊕ 1 | 2 3 | 4 5 6	OPEN	OPEN	BETWEEN CCT 1&2 3&4	NONE
93050-1569	93049-0206	CCT 2, 5	NONE	□□□□□□ ⊕ + ⊕ ⊕ + ⊕ 1 | 2 3 4 5 6	OPEN	OPEN	BETWEEN CCT 2&3	NONE
93050-1570	93049-0426	NONE	NONE	□□□□□□ ⊕ ⊕ ⊕ ⊕ ⊕ ⊕ 1 2 3 4 | 5 6	CLOSED	CLOSED	BETWEEN CCT 4&5	BLACK
93050-1571	93049-0006	NONE	a c e g	a □ c □ e □ g ⊕⊕⊕⊕⊕⊕ 1 2 3 4 5 6	OPEN	OPEN	NONE	BLACK
93050-1572	93049-0006	NONE	NONE	□□□□□□ ⊕⊕⊕⊕⊕⊕ 1 2 3 4 5 6	OPEN	OPEN	NONE	BLACK
93050-1573	93049-0006	CCT 2	NONE	□□□□□□ ⊕ + ⊕ ⊕ ⊕ ⊕ 1 2 3 4 5 6	OPEN	OPEN	NONE	BLACK
93050-1574	93049-0006	CCT 5	NONE	□□□□□□ ⊕ ⊕ ⊕ ⊕ + ⊕ 1 2 3 4 5 6	OPEN	OPEN	NONE	NONE
93050-1575	93049-0426	NONE	NONE	□□□□□□ ⊕ ⊕ ⊕ ⊕ ⊕ ⊕ 1 2 3 4 | 5 6	CLOSED	CLOSED	BETWEEN CCT 4&5	YELLOW
93050-1576	93049-0026	NONE	NONE	□□□□□□ ⊕⊕⊕⊕⊕⊕ 1 2 3 4 5 6	CLOSED	CLOSED	NONE	GREEN
93050-1577	93049-0006	NONE	NONE	□□□□□□ ⊕⊕⊕⊕⊕⊕ 1 2 3 4 5 6	OPEN	OPEN	NONE	BROWN
93050-1578	93049-0006	NONE	a c d e f g	a □ c d e f g ⊕⊕⊕⊕⊕⊕ 1 2 3 4 5 6	OPEN	OPEN	NONE	NONE
93050-1579	93049-0006	CCT 5	a c d e f g	a □ c d e f g ⊕⊕⊕⊕ + ⊕ 1 2 3 4 5 6	OPEN	OPEN	NONE	NONE
93050-1580	93049-0126	NONE	NONE	□□□□□□ ⊕ ⊕ ⊕ ⊕ ⊕ ⊕ 1 | 2 3 4 5 6	CLOSED	CLOSED	BETWEEN CCT 1&2	NONE

6CCT CONTINUED ON NEXT SHEET

NOTES

1. + DENOTES TERMINAL VOIDED POSITION
   ⊕ DENOTES TERMINAL LOADED POSITION
   \| DENOTES POLARIZING RIB POSITION
2. MOLEX HOUSING NO. FOR REFERENCE ONLY

THIS DRAWING CONTAINS INFORMATION THAT IS PROPRIETARY TO MOLEX ELECTRONIC TECHNOLOGIES, LLC AND SHOULD NOT BE USED WITHOUT WRITTEN PERMISSION

QUALITY SYMBOLS	
E/V	= 0
E/C	= 0
E/P	= 0
▼	= 0
V	= 0
☒	= 0
■	= 0
▽	= 0

NEW PART# ADDED
EC NO: 120091 2017/07/31
DRWN: BODEA 2017/09/07
CHK'D: ZCRAMER 2017/09/07
APPR: BRUTTLE
REV: H

GENERAL TOLERANCES (UNLESS SPECIFIED)	
ANGULAR TOL ± 0.5 °	
4 PLACES	±
3 PLACES	± 0.05
2 PLACES	± 0.1
1 PLACE	± 0.2
0 PLACES	±

DRAFT WHERE APPLICABLE MUST REMAIN WITHIN DIMENSIONS

DIMENSION UNITS	mm
SCALE	1:1
DRWN BY	CFISHER01
DATE	2015/11/24
CHK'D BY	CMONAHAN
DATE	2016/01/19
APPR BY	MSHANAHAN
DATE	2016/01/20
DRAWING SIZE	A2
THIRD ANGLE PROJECTION	

molex

APPLI-MATE 2.5 FEMALE G.W.T. 750 VERSION

PRODUCT CUSTOMER DRAWING

SERIES	MATERIAL NUMBER	CUSTOMER
93050	SEE SHEETS	GENERAL MARKET

DOCUMENT NUMBER	DOC TYPE	DOC PART	SHEET NUMBER
930500001	PSD	000	11 OF 17

RELEASE STATUS	P1	RELEASE DATE	07.09.2017 16:24:01

FORMAT: molex-tb-prod-A2
REVISION: D
DATE: 2010/09/04

6 CIRCUIT

PART NUMBER	HOUSING USED	TERMINAL VOID POSITION	REMOVED POSITION KEYS	CONFIGURATION	FIRST ENDWALL	LAST ENDWALL	POLARIZING RIB BETWEEN	COLOUR STRIPE
93050-1581	93049-0226	NONE	NONE	⊕⊕|⊕⊕⊕⊕ 1 2 3 4 5 6	CLOSED	CLOSED	BETWEEN CCT 2&3	NONE
93050-1582	93049-0006	CCT 1	NONE	+⊕⊕⊕⊕⊕ 1 2 3 4 5 6	OPEN	OPEN	NONE	NONE
93050-1583	93049-0006	CCT 3,4	NONE	⊕⊕++⊕⊕ 1 2 3 4 5 6	OPEN	OPEN	NONE	NONE
93050-1584	93049-0506	NONE	a g	a g ⊕⊕⊕⊕⊕|⊕ 1 2 3 4 5 6	OPEN	OPEN	BETWEEN CCT 5&6	NONE

7 CIRCUIT

PART NUMBER	HOUSING USED	TERMINAL VOID POSITION	REMOVED POSITION KEYS	CONFIGURATION	FIRST ENDWALL	LAST ENDWALL	POLARIZING RIB BETWEEN	COLOUR STRIPE
93050-2001	93049-0007	NONE	NONE	⊕⊕⊕⊕⊕⊕⊕ 1 2 3 4 5 6 7	OPEN	OPEN	NONE	NONE
93050-2002	93049-0007	CCT 2, 3, 5	c d f h	c d f h ⊕++⊕+⊕⊕ 1 2 3 4 5 6 7	OPEN	OPEN	NONE	NONE
93050-2003	93049-0007	NONE	a c d e f g	a c d e f g ⊕⊕⊕⊕⊕⊕⊕ 1 2 3 4 5 6 7	OPEN	OPEN	NONE	NONE
93050-2004	93049-0007	NONE	b c f h	b c f h ⊕⊕⊕⊕⊕⊕⊕ 1 2 3 4 5 6 7	OPEN	OPEN	NONE	NONE
93050-2005	93049-0007	NONE	b c d e f	b c d e f ⊕⊕⊕⊕⊕⊕⊕ 1 2 3 4 5 6 7	OPEN	OPEN	NONE	NONE
93050-2006	93049-0007	CCT 3	a c e f h	a c e f h ⊕⊕+⊕⊕⊕⊕ 1 2 3 4 5 6 7	OPEN	OPEN	NONE	YELLOW
93050-2007	93049-0007	NONE	a c d e f h	a c d e f h ⊕⊕⊕⊕⊕⊕⊕ 1 2 3 4 5 6 7	OPEN	OPEN	NONE	NONE
93050-2008	93049-0007	CCT 2,4,6,7	b e	b e ⊕+⊕+⊕++ 1 2 3 4 5 6 7	OPEN	OPEN	NONE	BLUE
93050-2009	93049-0607	NONE	NONE	⊕⊕⊕⊕⊕⊕⊕ 1 2 3 4 5 6|7	OPEN	OPEN	BETWEEN CCT 6&7	NONE
93050-2010	93049-0007	CCT 2,3	b c f h	b c f h ⊕++⊕⊕⊕⊕ 1 2 3 4 5 6 7	OPEN	OPEN	NONE	NONE
93050-2011	93049-0007	NONE	a d	a d ⊕⊕⊕⊕⊕⊕⊕ 1 2 3 4 5 6 7	OPEN	OPEN	NONE	NONE
93050-2012	93049-0007	NONE	a b e f	a b e f ⊕⊕⊕⊕⊕⊕⊕ 1 2 3 4 5 6 7	OPEN	OPEN	NONE	NONE
93050-2013	93049-0007	NONE	b c d f	b c d f ⊕⊕⊕⊕⊕⊕⊕ 1 2 3 4 5 6 7	OPEN	OPEN	NONE	NONE
93050-2015	93049-0107	NONE	a h	a h ⊕⊕⊕⊕⊕⊕⊕ 1|2 3 4 5 6 7	OPEN	OPEN	BETWEEN CCT 1&2	NONE
93050-2016	93049-0007	NONE	a d e f h	a d e f h ⊕⊕⊕⊕⊕⊕⊕ 1 2 3 4 5 6 7	OPEN	OPEN	NONE	NONE
93050-2017	93049-0007	NONE	b d e f h	b d e f h ⊕⊕⊕⊕⊕⊕⊕ 1 2 3 4 5 6 7	OPEN	OPEN	NONE	NONE
93050-2018	93049-0007	NONE	a b	a b ⊕⊕⊕⊕⊕⊕⊕ 1 2 3 4 5 6 7	OPEN	OPEN	NONE	NONE
93050-2019	93049-0007	NONE	c d e f g h	c d e f g h ⊕⊕⊕⊕⊕⊕⊕ 1 2 3 4 5 6 7	OPEN	OPEN	NONE	NONE
93050-2020	93049-0227	NONE	NONE	⊕⊕|⊕⊕⊕⊕⊕ 1 2|3 4 5 6 7	CLOSED	CLOSED	BETWEEN CCT 2&3	NONE
93050-2021	93049-0627	NONE	ALL	a b c d e f g h ⊕⊕⊕⊕⊕⊕|⊕ 1 2 3 4 5 6|7	CLOSED	CLOSED	BETWEEN CCT 6&7	NONE
93050-2022	93049-0007	CCT 2,3,4,6	NONE	⊕+++⊕+⊕ 1 2 3 4 5 6 7	OPEN	OPEN	NONE	NONE
93050-2023	93049-0027	NONE	NONE	⊕⊕⊕⊕⊕⊕⊕ 1 2 3 4 5 6 7	CLOSED	CLOSED	NONE	NONE
93050-2024	93049-0207	NONE	NONE	⊕⊕|⊕⊕⊕⊕⊕ 1 2|3 4 5 6 7	OPEN	OPEN	BETWEEN CCT 2&3	BLUE
93050-2025	93049-0207	CCT 1,2	NONE	++|⊕⊕⊕⊕⊕ 1 2|3 4 5 6 7	OPEN	OPEN	BETWEEN CCT 2&3	BLUE
93050-2026	93049-0007	CCT 2,4,6	NONE	⊕+⊕+⊕+⊕ 1 2 3 4 5 6 7	OPEN	OPEN	NONE	NONE

7CCT CONTINUED ON NEXT SHEET

NOTES

1. + DENOTES TERMINAL VOIDED POSITION
   ⊕ DENOTES TERMINAL LOADED POSITION
   \| DENOTES POLARIZING RIB POSITION
2. MOLEX HOUSING NO. FOR REFERENCE ONLY

QUALITY SYMBOLS: E/A = 0; E/C = 0; E/D = 0; ▼ = 0; E/F = 0; ☒ = 0; ■ = 0; E/B = 0

NEW PART# ADDED 2017/07/31
EC NO: 120091 2017/09/07
DRWN: BODEA 2017/09/07
CHK'D: ZCRAMER
APPR: BRUTTLE

REV: H

THIS DRAWING CONTAINS INFORMATION THAT IS PROPRIETARY TO MOLEX ELECTRONIC TECHNOLOGIES, LLC AND SHOULD NOT BE USED WITHOUT WRITTEN PERMISSION

GENERAL TOLERANCES (UNLESS SPECIFIED)
ANGULAR TOL ± 0.5 °
4 PLACES ±
3 PLACES ± 0.05
2 PLACES ± 0.1
1 PLACE ± 0.2
0 PLACES ±
DRAFT WHERE APPLICABLE MUST REMAIN WITHIN DIMENSIONS

DIMENSION UNITS: mm
SCALE: 1:1
DRWN BY: CFISHER01 DATE: 2015/11/24
CHK'D BY: CMONAHAN DATE: 2016/01/19
APPR BY: MSHANAHAN DATE: 2016/01/20
DRAWING SIZE: A2
THIRD ANGLE PROJECTION

molex

APPLI-MATE 2.5 FEMALE G.W.T. 750 VERSION

PRODUCT CUSTOMER DRAWING

SERIES	MATERIAL NUMBER	CUSTOMER
93050	SEE SHEETS	GENERAL MARKET

DOCUMENT NUMBER	DOC TYPE	DOC PART	SHEET NUMBER
930500001	PSD	000	12 OF 17

RELEASE STATUS	P1	RELEASE DATE	07.09.2017 16:24:01

FORMAT: molex-tb-prod-A2
REVISION: D
DATE: 2015/09/04

7 CIRCUIT

PART NUMBER	HOUSING USED	TERMINAL VOID POSITION	REMOVED POSITION KEYS	CONFIGURATION	FIRST ENDWALL	LAST ENDWALL	POLARIZING RIB BETWEEN	COLOUR STRIPE
93050-2027	93049-0007	CCT 2,4	NONE	⊕+⊕+⊕⊕⊕ 1 2 3 4 5 6 7	OPEN	OPEN	NONE	GREEN
93050-2028	93049-0007	4,7	NONE	⊕⊕⊕+⊕⊕+ 1 2 3 4 5 6 7	OPEN	OPEN	NONE	BLUE
93050-2029	93049-0007	NONE	b c e f	□ b c □ e f □□ ⊕⊕⊕⊕⊕⊕⊕ 1 2 3 4 5 6 7	OPEN	OPEN	NONE	NONE
93050-2030	93049-0007	NONE	b e	□ b □□ e □□□ ⊕⊕⊕⊕⊕⊕⊕ 1 2 3 4 5 6 7	OPEN	OPEN	NONE	NONE
93050-2031	93049-0007	5,6,7	b e	□ b □□ e □□□ ⊕⊕⊕⊕+++ 1 2 3 4 5 6 7	OPEN	OPEN	NONE	NONE
93050-2032	93049-0007	5,6,7	NONE	□□□□□□□ ⊕⊕⊕⊕+++ 1 2 3 4 5 6 7	OPEN	OPEN	NONE	NONE
93050-2033	93049-0007	NONE	a b d e g h	a b □ d e □ g h ⊕⊕⊕⊕⊕⊕⊕ 1 2 3 4 5 6 7	OPEN	OPEN	NONE	NONE
93050-2034	93049-0007	NONE	b c d e f g	□ b c d e f g □ ⊕⊕⊕⊕⊕⊕⊕ 1 2 3 4 5 6 7	OPEN	OPEN	NONE	NONE
93050-2035	93049-0007	NONE	a c f h	a □ c □□ f □ h ⊕⊕⊕⊕⊕⊕⊕ 1 2 3 4 5 6 7	OPEN	OPEN	NONE	NONE
93050-2036	93049-0007	CCT 1,2,3,4,6	a c f	a □ c □□ f □□ +++++⊕+⊕ 1 2 3 4 5 6 7	OPEN	OPEN	NONE	NONE
93050-2037	93049-0067	NONE	NONE	□□□□□□□ ⊕⊕⊕⊕⊕⊕⊕ 1 2 3 4 5 6 7	CLOSED	OPEN	NONE	NONE
93050-2038	93049-0627	NONE	NONE	□□□□□□□ ⊕⊕⊕⊕⊕⊕⊕ 1 2 3 4 5 6 | 7	CLOSED	CLOSED	BETWEEN CCT 6&7	NONE
93050-2039	93049-0007	NONE	NONE	□□□□□□□ ⊕⊕⊕⊕⊕⊕⊕ 1 2 3 4 5 6 7	OPEN	OPEN	NONE	BLUE
93050-2040	93049-0207	NONE	NONE	□□□□□□□ ⊕⊕|⊕⊕⊕⊕⊕ 1 2 | 3 4 5 6 7	OPEN	OPEN	BETWEEN CCT 2&3	NONE
93050-2041	93049-0007	CCT 2,6	a h	a □□□□□□ h ⊕+⊕⊕⊕+⊕ 1 2 3 4 5 6 7	OPEN	OPEN	NONE	NONE
93050-2042	93049-0007	CCT 2,6	a h	a □□□□□□ h ⊕+⊕⊕⊕+⊕ 1 2 3 4 5 6 7	OPEN	OPEN	NONE	BLACK
93050-2043	93049-0007	CCT 1, 2, 3, 4	b c d e f g	□ b c d e f g □ +++⊕⊕⊕ 1 2 3 4 5 6 7	OPEN	OPEN	NONE	NONE
93050-2044	93049-0007	CCT 6	NONE	□□□□□□□ ⊕⊕⊕⊕⊕+⊕ 1 2 3 4 5 6 7	OPEN	OPEN	NONE	NONE

NOTES

1. + DENOTES TERMINAL VOIDED POSITION
   ⊕ DENOTES TERMINAL LOADED POSITION
   | DENOTES POLARIZING RIB POSITION
2. MOLEX HOUSING NO. FOR REFERENCE ONLY

QUALITY SYMBOLS
A = 0
E = 0
G = 0
▼ = 0
C = 0
⊠ = 0
■ = 0
▽ = 0

NEW PART# ADDED
EC NO: 120091 2017/07/31
DRWN: BODEA 2017/09/07
CHK'D: ZCRAMER 2017/09/07
APPR: BRUTTLE

REV: H

THIS DRAWING CONTAINS INFORMATION THAT IS PROPRIETARY TO MOLEX ELECTRONIC TECHNOLOGIES, LLC AND SHOULD NOT BE USED WITHOUT WRITTEN PERMISSION

GENERAL TOLERANCES (UNLESS SPECIFIED)
ANGULAR TOL ± 0.5 °
4 PLACES ±
3 PLACES ± 0.05
2 PLACES ± 0.1
1 PLACE ± 0.2
0 PLACES ±
DRAFT WHERE APPLICABLE MUST REMAIN WITHIN DIMENSIONS

DIMENSION UNITS: mm
SCALE: 1:1
DRWN BY: CFISHER01 DATE: 2015/11/24
CHK'D BY: CMONAHAN DATE: 2016/01/19
APPR BY: MSHANAHAN DATE: 2016/01/20
DRAWING SIZE: A2
THIRD ANGLE PROJECTION

molex

APPLI-MATE 2.5 FEMALE G.W.T. 750 VERSION

PRODUCT CUSTOMER DRAWING

SERIES	MATERIAL NUMBER	CUSTOMER
93050	SEE SHEETS	GENERAL MARKET

DOCUMENT NUMBER	DOC TYPE	DOC PART	SHEET NUMBER
930500001	PSD	000	13 OF 17

RELEASE STATUS	P1	RELEASE DATE	07.09.2017 16:24:01

FORMAT: master-tb-prod-A2
REVISION: D
DATE: 2015/09/04

8 CIRCUIT

PART NUMBER	HOUSING USED	TERMINAL VOID POSITION	REMOVED POSITION KEYS	CONFIGURATION	FIRST ENDWALL	LAST ENDWALL	POLARIZING RIB BETWEEN	COLOUR STRIPE
93050-2501	93049-0008	NONE	NONE	⊕⊕⊕⊕⊕⊕⊕⊕	OPEN	OPEN	NONE	NONE
93050-2502	93049-0008	CCT 2,5,7	b c d f g h i	b c d f g h i ⊕+⊕⊕+⊕+⊕	OPEN	OPEN	NONE	NONE
93050-2503	93049-0008	NONE	c f h i	c f h i ⊕⊕⊕⊕⊕⊕⊕⊕	OPEN	OPEN	NONE	NONE
93050-2504	93049-0608	NONE	NONE	⊕⊕⊕⊕⊕⊕⊕⊕	OPEN	OPEN	BETWEEN CCT 6&7	BLUE
93050-2505	93049-0708	NONE	NONE	⊕⊕⊕⊕⊕⊕⊕⊕	OPEN	OPEN	BETWEEN CCT 7&8	BLUE
93050-2506	93049-0008	NONE	b c d g h i	b c d g h i ⊕⊕⊕⊕⊕⊕⊕⊕	OPEN	OPEN	NONE	NONE
93050-2507	93049-0708	NONE	NONE	⊕⊕⊕⊕⊕⊕⊕⊕	OPEN	OPEN	BETWEEN CCT 7&8	NONE
93050-2508	93049-0608	NONE	NONE	⊕⊕⊕⊕⊕⊕⊕⊕	OPEN	OPEN	BETWEEN CCT 6&7	NONE
93050-2509	93049-0008	CCT 1,2,5	a b d f h i	a b f h i ++⊕⊕+⊕⊕⊕	OPEN	OPEN	NONE	NONE
93050-2751	93049-0048	NONE	NONE	⊕⊕⊕⊕⊕⊕⊕⊕	OPEN	CLOSED	NONE	NONE
93050-2752	93049-0008	CCT 1,2,7,8	a b d f h i	a b d f h i ++⊕⊕⊕++	OPEN	OPEN	NONE	BLACK
93050-2753	93049-1308	NONE	NONE	⊕⊕⊕⊕⊕⊕⊕⊕	OPEN	OPEN	BETWEEN CCT 1&2-7&8	NONE
93050-2754	93049-0568	NONE	NONE	⊕⊕⊕⊕⊕⊕⊕⊕	CLOSED	OPEN	BETWEEN CCT 5&6	NONE
93050-2510	93049-0008	NONE	a b c d g h	a b c d g h ⊕⊕⊕⊕⊕⊕⊕⊕	OPEN	OPEN	NONE	NONE
93050-2511	93049-0008	NONE	a c d e g h i	a c d e g h i ⊕⊕⊕⊕⊕⊕⊕⊕	OPEN	OPEN	NONE	NONE
93050-2512	93049-0728	NONE	NONE	⊕⊕⊕⊕⊕⊕⊕⊕	CLOSED	CLOSED	BETWEEN CCT 7&8	NONE
93050-2513	93049-0008	NONE	b c d h i	b c d h i ⊕⊕⊕⊕⊕⊕⊕⊕	OPEN	OPEN	NONE	NONE
93050-2515	93049-0028	NONE	NONE	⊕⊕⊕⊕⊕⊕⊕⊕	CLOSED	CLOSED	NONE	NONE
93050-2516	93049-0008	CCT 2,4	NONE	⊕+⊕+⊕⊕⊕⊕	OPEN	OPEN	NONE	NONE
93050-2517	93049-0008	5, 7	NONE	⊕⊕⊕⊕+⊕+⊕	OPEN	OPEN	NONE	NONE
93050-2518	93049-0008	CCT 2	NONE	⊕+⊕⊕⊕⊕⊕	OPEN	OPEN	NONE	NONE
93050-2519	93049-0068	5, 7	NONE	⊕⊕⊕⊕+⊕+⊕	CLOSED	OPEN	NONE	NONE
93050-2520	93049-0208	CCT 2,4	NONE	⊕+⊕+⊕⊕⊕⊕	OPEN	OPEN	BETWEEN CCT 2&3	RED
93050-2521	93049-0308	NONE	NONE	⊕⊕⊕⊕⊕⊕⊕⊕	OPEN	OPEN	BETWEEN CCT 3&4	NONE
93050-2522	93049-0008	NONE	c h i	c h i ⊕⊕⊕⊕⊕⊕⊕⊕	OPEN	OPEN	NONE	NONE
93050-2523	93049-0088	5, 7	NONE	⊕⊕⊕⊕+⊕+⊕	NARROW	OPEN	NONE	NONE
93050-2524	93049-0328	NONE	NONE	⊕⊕⊕⊕⊕⊕⊕⊕	CLOSED	CLOSED	BETWEEN CCT 3&4	NONE
93050-2525	93049-0008	NONE	a b c g h i	a b c g h i ⊕⊕⊕⊕⊕⊕⊕⊕	OPEN	OPEN	NONE	NONE
93050-2526	93049-0208	CCT 2,5	NONE	⊕+⊕⊕+⊕⊕⊕	OPEN	OPEN	BETWEEN CCT 2&3	BLUE
93050-2527	93049-0008	CCT 3,4,5	NONE	⊕⊕+++⊕⊕⊕	OPEN	OPEN	NONE	NONE

8 CIRCUIT

PART NUMBER	HOUSING USED	TERMINAL VOID POSITION	REMOVED POSITION KEYS	CONFIGURATION	FIRST ENDWALL	LAST ENDWALL	POLARIZING RIB BETWEEN	COLOUR STRIPE
93050-2528	93049-0008	CCT 4,5,6	NONE	⊕⊕⊕+++⊕⊕	OPEN	OPEN	NONE	NONE
93050-2529	93049-0008	CCT 2,6	NONE	⊕+⊕⊕⊕+⊕⊕	OPEN	OPEN	NONE	NONE
93050-2530	93049-0008	NONE	a e f g h i	a e f g h i ⊕⊕⊕⊕⊕⊕⊕⊕	OPEN	OPEN	NONE	NONE

NOTES

1. + DENOTES TERMINAL VOIDED POSITION
   ⊕ DENOTES TERMINAL LOADED POSITION
   | DENOTES POLARIZING RIB POSITION
2. MOLEX HOUSING NO. FOR REFERENCE ONLY

RELEASE STATUS	P1	RELEASE DATE	07.09.2017 16:24:01

QUALITY SYMBOLS: = 0

NEW PART# ADDED — EC NO: 120091 — DRWN: BODEA — CHK'D: ZCRAMER — APPR: BRUTTLE — 2017/07/31 — 2017/09/07 — 2017/09/07

REV: H

THIS DRAWING CONTAINS INFORMATION THAT IS PROPRIETARY TO MOLEX ELECTRONIC TECHNOLOGIES, LLC AND SHOULD NOT BE USED WITHOUT WRITTEN PERMISSION

GENERAL TOLERANCES (UNLESS SPECIFIED): ANGULAR TOL ± 0.5 °; 4 PLACES ±; 3 PLACES ± 0.05; 2 PLACES ± 0.1; 1 PLACE ± 0.2; 0 PLACES ±

DRAFT WHERE APPLICABLE MUST REMAIN WITHIN DIMENSIONS

DIMENSION UNITS: mm — SCALE: 1:1

DRWN BY: CFISHER01 — DATE: 2015/11/24

CHK'D BY: CMONAHAN — DATE: 2016/01/19

APPR BY: MSHANAHAN — DATE: 2016/01/20

DRAWING SIZE: A2 — THIRD ANGLE PROJECTION

molex

APPLI-MATE 2.5 FEMALE G.W.T. 750 VERSION

PRODUCT CUSTOMER DRAWING

SERIES	MATERIAL NUMBER	CUSTOMER
93050	SEE SHEETS	GENERAL MARKET

DOCUMENT NUMBER	DOC TYPE	DOC PART	SHEET NUMBER
930500001	PSD	000	14 OF 17

FORMAT: master-tb-prod-A2
REVISION: D
DATE: 2015/09/04

9 CIRCUIT

PART NUMBER	HOUSING USED	TERMINAL VOID POSITION	REMOVED POSITION KEYS	CONFIGURATION	FIRST ENDWALL	LAST ENDWALL	POLARIZING RIB BETWEEN	COLOUR STRIPE
93050-3001	93049-0009	NONE	NONE	⊕⊕⊕⊕⊕⊕⊕⊕⊕ / 1 2 3 4 5 6 7 8 9	OPEN	OPEN	NONE	NONE
93050-3002	93049-0009	CCT 3, 5, 8	b c d e f g h i	⊕⊕+⊕+⊕⊕+⊕ / 1 2 3 4 5 6 7 8 9	OPEN	OPEN	NONE	NONE
93050-3003	93049-0809	NONE	NONE	⊕⊕⊕⊕⊕⊕⊕⊕⊕ / 1 2 3 4 5 6 7 8 9	OPEN	OPEN	BETWEEN CCT 8&9	NONE
93050-3004	93049-0409	NONE	NONE	⊕⊕⊕⊕⊕⊕⊕⊕⊕ / 1 2 3 4 5 6 7 8 9	OPEN	OPEN	BETWEEN CCT 4&5	NONE
93050-3005	93049-0009	CCT 2, 5, 8	b c h i	⊕+⊕⊕+⊕⊕+⊕ / 1 2 3 4 5 6 7 8 9	OPEN	OPEN	NONE	NONE
93050-3006	93049-0009	NONE	b c h i	⊕⊕⊕⊕⊕⊕⊕⊕⊕ / 1 2 3 4 5 6 7 8 9	OPEN	OPEN	NONE	NONE
93050-3007	93049-0009	CCT 3, 5, 8	NONE	⊕⊕+⊕+⊕⊕+⊕ / 1 2 3 4 5 6 7 8 9	OPEN	OPEN	NONE	BLUE
93050-3008	93049-0829	NONE	NONE	⊕⊕⊕⊕⊕⊕⊕⊕⊕ / 1 2 3 4 5 6 7 8 9	CLOSED	CLOSED	BETWEEN CCT 8&9	NONE
93050-3009	93049-0029	NONE	NONE	⊕⊕⊕⊕⊕⊕⊕⊕⊕ / 1 2 3 4 5 6 7 8 9	CLOSED	CLOSED	NONE	NONE
93050-3010	93049-0009	CCT 3,5,7,8,9	NONE	⊕⊕+⊕+⊕+++ / 1 2 3 4 5 6 7 8 9	OPEN	OPEN	NONE	NONE
93050-3011	93049-0309	NONE	NONE	⊕⊕⊕⊕⊕⊕⊕⊕⊕ / 1 2 3 4 5 6 7 8 9	OPEN	OPEN	BETWEEN CCT 3&4	NONE
93050-3012	93049-0209	NONE	NONE	⊕⊕⊕⊕⊕⊕⊕⊕⊕ / 1 2 3 4 5 6 7 8 9	OPEN	OPEN	BETWEEN CCT 2&3	NONE
93050-3013	93049-0509	NONE	NONE	⊕⊕⊕⊕⊕⊕⊕⊕⊕ / 1 2 3 4 5 6 7 8 9	OPEN	OPEN	BETWEEN CCT 5&6	NONE
93050-3014	93049-0009	CCT 2, 5, 8	NONE	⊕+⊕⊕+⊕⊕+⊕ / 1 2 3 4 5 6 7 8 9	OPEN	OPEN	NONE	NONE
93050-3015	93049-0009	NONE	a b c d e f g h j	⊕⊕⊕⊕⊕⊕⊕⊕⊕ / 1 2 3 4 5 6 7 8 9	OPEN	OPEN	NONE	NONE
93050-3016	93049-0009	CKT 1,5	a d f g i	+⊕⊕⊕+⊕⊕⊕⊕ / 1 2 3 4 5 6 7 8 9	OPEN	OPEN	NONE	RED
93050-3017	93049-0009	CKT 1,5	NONE	+⊕⊕⊕+⊕⊕⊕⊕ / 1 2 3 4 5 6 7 8 9	OPEN	OPEN	NONE	RED
93050-3018	93049-0009	CCT 2,4	a d f g i	⊕+⊕+⊕⊕⊕⊕⊕ / 1 2 3 4 5 6 7 8 9	OPEN	OPEN	NONE	RED
93050-3019	93049-0009	CCT 2,4	NONE	⊕+⊕+⊕⊕⊕⊕⊕ / 1 2 3 4 5 6 7 8 9	OPEN	OPEN	NONE	RED
93050-3020	93049-0009	CKT 1,5	a d f g i	+⊕⊕⊕+⊕⊕⊕⊕ / 1 2 3 4 5 6 7 8 9	OPEN	OPEN	NONE	GREEN
93050-3021	93049-0009	CKT 1,5	NONE	+⊕⊕⊕+⊕⊕⊕⊕ / 1 2 3 4 5 6 7 8 9	OPEN	OPEN	NONE	GREEN
93050-3022	93049-0009	CKT 1,5	a c d f h j	+⊕⊕⊕+⊕⊕⊕⊕ / 1 2 3 4 5 6 7 8 9	OPEN	OPEN	NONE	GREEN
93050-3023	93049-0009	CKT 1,5	a c d f h j	+⊕⊕⊕+⊕⊕⊕⊕ / 1 2 3 4 5 6 7 8 9	OPEN	OPEN	NONE	RED
93050-3024	93049-0009	CKT 3,5,8	c d e i j	⊕⊕+⊕+⊕⊕+⊕ / 1 2 3 4 5 6 7 8 9	OPEN	OPEN	NONE	BLUE
93050-3025	93049-0009	CKT 2,4	a c d f h j	⊕+⊕+⊕⊕⊕⊕⊕ / 1 2 3 4 5 6 7 8 9	OPEN	OPEN	NONE	RED

10 CIRCUIT

PART NUMBER	HOUSING USED	TERMINAL VOID POSITION	REMOVED POSITION KEYS	CONFIGURATION	FIRST ENDWALL	LAST ENDWALL	POLARIZING RIB BETWEEN	COLOUR STRIPE
93050-3501	93049-0010	NONE	NONE	⊕⊕⊕⊕⊕⊕⊕⊕⊕⊕ / 1 2 3 4 5 6 7 8 9 10	OPEN	OPEN	NONE	NONE
93050-3502	93049-0110	NONE	NONE	⊕⊕⊕⊕⊕⊕⊕⊕⊕⊕ / 1 2 3 4 5 6 7 8 9 10	OPEN	OPEN	BETWEEN CCT 1&2	NONE
93050-3503	93049-0010	CCT 2, 9	NONE	⊕+⊕⊕⊕⊕⊕⊕+⊕ / 1 2 3 4 5 6 7 8 9 10	OPEN	OPEN	NONE	BLUE
93050-3504	93049-0010	CCT 2, 5, 7, 9	NONE	⊕+⊕⊕+⊕+⊕+⊕ / 1 2 3 4 5 6 7 8 9 10	OPEN	OPEN	NONE	NONE
93050-3505	93049-0010	CCT 2, 4, 6, 9	NONE	⊕+⊕+⊕+⊕⊕+⊕ / 1 2 3 4 5 6 7 8 9 10	OPEN	OPEN	NONE	NONE
93050-3506	93049-0930	NONE	NONE	⊕⊕⊕⊕⊕⊕⊕⊕⊕⊕ / 1 2 3 4 5 6 7 8 9 10	CLOSED	CLOSED	BETWEEN CCT 9&10	NONE
93050-3507	93049-0030	NONE	NONE	⊕⊕⊕⊕⊕⊕⊕⊕⊕⊕ / 1 2 3 4 5 6 7 8 9 10	CLOSED	CLOSED	NONE	NONE
93050-3508	93049-0010	CCT 2,5,7,9	b c d e f g h i j	⊕+⊕⊕+⊕+⊕+⊕ / 1 2 3 4 5 6 7 8 9 10	OPEN	OPEN	NONE	BLUE
93050-3509	93049-0010	CCT 2,4,6,9	c d e f g h i	⊕+⊕+⊕+⊕⊕+⊕ / 1 2 3 4 5 6 7 8 9 10	OPEN	OPEN	NONE	BLUE
93050-3510	93049-0010	CCT 2,6,9	NONE	⊕+⊕⊕⊕+⊕⊕+⊕ / 1 2 3 4 5 6 7 8 9 10	OPEN	OPEN	NONE	NONE
93050-3511	93049-0010	CCT 2, 5, 7, 9	NONE	⊕+⊕⊕+⊕+⊕+⊕ / 1 2 3 4 5 6 7 8 9 10	OPEN	OPEN	NONE	BLUE
93050-3512	93049-0010	CCT 2,4,6,9	NONE	⊕+⊕+⊕+⊕⊕+⊕ / 1 2 3 4 5 6 7 8 9 10	OPEN	OPEN	NONE	BLUE
93050-3513	93049-0710	NONE	NONE	⊕⊕⊕⊕⊕⊕⊕⊕⊕⊕ / 1 2 3 4 5 6 7 8 9 10	OPEN	OPEN	BETWEEN CCT 7&8	NONE
93050-3514	93049-0010	NONE	NONE	⊕⊕⊕⊕⊕⊕⊕⊕⊕⊕ / 1 2 3 4 5 6 7 8 9 10	OPEN	OPEN	NONE	BLUE
93050-3515	93049-0910	CCT 2, 4, 6, 9	d e f g h	⊕+⊕+⊕+⊕⊕+⊕ / 1 2 3 4 5 6 7 8 9 10	OPEN	OPEN	BETWEEN CCT 9&10	NONE
93050-3516	93049-0010	NONE	b c d e f g h i j	⊕⊕⊕⊕⊕⊕⊕⊕⊕⊕ / 1 2 3 4 5 6 7 8 9 10	OPEN	OPEN	NONE	NONE
93050-3517	93049-0230	NONE	NONE	⊕⊕⊕⊕⊕⊕⊕⊕⊕⊕ / 1 2 3 4 5 6 7 8 9 10	CLOSED	CLOSED	BETWEEN CCT 2&3	NONE
93050-3518	93049-0130	NONE	NONE	⊕⊕⊕⊕⊕⊕⊕⊕⊕⊕ / 1 2 3 4 5 6 7 8 9 10	CLOSED	CLOSED	BETWEEN CCT 1&2	NONE

NOTES

1. + DENOTES TERMINAL VOIDED POSITION
   ⊕ DENOTES TERMINAL LOADED POSITION
   | DENOTES POLARIZING RIB POSITION
2. MOLEX HOUSING NO. FOR REFERENCE ONLY

QUALITY SYMBOLS: A = 0; E = 0; D = 0; ▼ = 0; C = 0; ☒ = 0; ■ = 0; ▽ = 0

NEW PART# ADDED — EC NO: 120091 2017/07/31; DRWN: BODEA 2017/09/07; CHK'D: ZCRAMER 2017/09/07; APPR: BRUTTLE

REV: H

THIS DRAWING CONTAINS INFORMATION THAT IS PROPRIETARY TO MOLEX ELECTRONIC TECHNOLOGIES, LLC AND SHOULD NOT BE USED WITHOUT WRITTEN PERMISSION

GENERAL TOLERANCES (UNLESS SPECIFIED): ANGULAR TOL ± 0.5 °; 4 PLACES ±; 3 PLACES ± 0.05; 2 PLACES ± 0.1; 1 PLACE ± 0.2; 0 PLACES ±

DRAFT WHERE APPLICABLE MUST REMAIN WITHIN DIMENSIONS

DIMENSION UNITS: mm — SCALE: 1:1

DRWN BY: CFISHER01 — DATE: 2015/11/24

CHK'D BY: CMONAHAN — DATE: 2016/01/19

APPR BY: MSHANAHAN — DATE: 2016/01/20

DRAWING SIZE: A2 — THIRD ANGLE PROJECTION

molex

APPLI-MATE 2.5 FEMALE G.W.T. 750 VERSION

PRODUCT CUSTOMER DRAWING

SERIES	MATERIAL NUMBER	CUSTOMER
93050	SEE SHEETS	GENERAL MARKET

DOCUMENT NUMBER	DOC TYPE	DOC PART	SHEET NUMBER
930500001	PSD	000	15 OF 17

RELEASE STATUS	P1	RELEASE DATE	07.09.2017 16:24:01

FORMAT: molex-tb-prod-A2
REVISION: D
DATE: 2015/09/04

11 CIRCUIT

PART NUMBER	HOUSING USED	TERMINAL VOID POSITION	REMOVED POSITION KEYS	CONFIGURATION	FIRST ENDWALL	LAST ENDWALL	POLARIZING RIB BETWEEN	COLOUR STRIPE
93050-4001	93049-0011	NONE	NONE	⊕⊕⊕⊕⊕⊕⊕⊕⊕⊕⊕ 1 2 3 4 5 6 7 8 9 10 11	OPEN	OPEN	NONE	NONE
93050-4002	93049-0911	NONE	b c d e f g h i j k	b c d e f g h i j k ⊕⊕⊕⊕⊕⊕⊕⊕⊕⊕⊕ 1 2 3 4 5 6 7 8 9 10 11	OPEN	OPEN	BETWEEN CCT 9&10	BLUE
93050-4003	93049-0011	NONE	b c d g h i j k	b c d g h i j k ⊕⊕⊕⊕⊕⊕⊕⊕⊕⊕⊕ 1 2 3 4 5 6 7 8 9 10 11	OPEN	OPEN	NONE	NONE
93050-4004	93049-0011	CCT 4, 6, 8, 10	NONE	⊕⊕⊕+⊕+⊕+⊕+⊕ 1 2 3 4 5 6 7 8 9 10 11	OPEN	OPEN	NONE	NONE
93050-4005	93049-0011	CCT 4,6,8,10	b c d e f g h i j k	b c d e f g h i j k ⊕⊕⊕+⊕+⊕+⊕+⊕ 1 2 3 4 5 6 7 8 9 10 11	OPEN	OPEN	NONE	NONE
93050-4006	93049-0011	CCT 4, 6, 8, 10	NONE	⊕⊕⊕+⊕+⊕+⊕+⊕ 1 2 3 4 5 6 7 8 9 10 11	OPEN	OPEN	NONE	ORANGE
93050-4007	93049-0911	NONE	NONE	⊕⊕⊕⊕⊕⊕⊕⊕⊕⊕⊕ 1 2 3 4 5 6 7 8 9 10 11	OPEN	OPEN	BETWEEN CCT 9&10	NONE
93050-4008	93049-0031	NONE	NONE	⊕⊕⊕⊕⊕⊕⊕⊕⊕⊕⊕ 1 2 3 4 5 6 7 8 9 10 11	CLOSED	CLOSED	NONE	NONE
93050-4009	93049-0511	NONE	NONE	⊕⊕⊕⊕⊕⊕⊕⊕⊕⊕⊕ 1 2 3 4 5 6 7 8 9 10 11	OPEN	OPEN	BETWEEN CCT 5&6	NONE
93050-4010	93049-0211	CCT 2, 4, 6	NONE	⊕+⊕+⊕+⊕⊕⊕⊕ 1 2 3 4 5 6 7 8 9 10 11	OPEN	OPEN	BETWEEN CCT 2&3	NONE
93050-4011	93049-0011	CCT 2, 4, 6, 7, 8, 10	c e f g i k l	c e f g i k l ⊕+⊕+⊕+++⊕+⊕ 1 2 3 4 5 6 7 8 9 10 11	OPEN	OPEN	NONE	BLACK
93050-4012	93049-0011	CCT 2, 4, 6, 7, 8, 10	NONE	⊕+⊕+⊕+++⊕+⊕ 1 2 3 4 5 6 7 8 9 10 11	OPEN	OPEN	NONE	BLACK
93050-4013	93049-0011	CCT 2, 4, 6, 9	NONE	⊕+⊕+⊕+⊕⊕+⊕⊕ 1 2 3 4 5 6 7 8 9 10 11	OPEN	OPEN	NONE	BLUE
93050-4014	93049-0011	CCT 4, 5, 6, 8, 10	NONE	⊕⊕⊕+++⊕+⊕+⊕ 1 2 3 4 5 6 7 8 9 10 11	OPEN	OPEN	NONE	NONE
93050-4015	93049-0011	CCT 4, 5, 6, 7, 8, 9, 10, 11	b c d e f g h i j k	b c d e f g h i j k ⊕⊕⊕+++++++++ 1 2 3 4 5 6 7 8 9 10 11	OPEN	OPEN	NONE	NONE
93050-4016	93049-0011	Cct 2, 4, 6, 7, 8, 10	b d e f h j	b d e f h j ⊕+⊕+⊕+++⊕+⊕ 1 2 3 4 5 6 7 8 9 10 11	OPEN	OPEN	NONE	BLACK

12 CIRCUIT

PART NUMBER	HOUSING USED	TERMINAL VOID POSITION	REMOVED POSITION KEYS	CONFIGURATION	FIRST ENDWALL	LAST ENDWALL	POLARIZING RIB BETWEEN	COLOUR STRIPE
93050-4501	93049-0012	NONE	NONE	⊕⊕⊕⊕⊕⊕⊕⊕⊕⊕⊕⊕ 1 2 3 4 5 6 7 8 9 10 11 12	OPEN	OPEN	NONE	NONE
93050-4502	93049-0072	NONE	b c d f h i k l	b c d f h i k l ⊕⊕⊕⊕⊕⊕⊕⊕⊕⊕⊕⊕ 1 2 3 4 5 6 7 8 9 10 11 12	CLOSED	OPEN	NONE	NONE
93050-4503	93049-0032	NONE	NONE	⊕⊕⊕⊕⊕⊕⊕⊕⊕⊕⊕⊕ 1 2 3 4 5 6 7 8 9 10 11 12	CLOSED	CLOSED	NONE	NONE
93050-4504	93049-0072	NONE	NONE	⊕⊕⊕⊕⊕⊕⊕⊕⊕⊕⊕⊕ 1 2 3 4 5 6 7 8 9 10 11 12	CLOSED	OPEN	NONE	NONE
93050-4505	93049-1132	NONE	NONE	⊕⊕⊕⊕⊕⊕⊕⊕⊕⊕⊕⊕ 1 2 3 4 5 6 7 8 9 10 11 12	CLOSED	CLOSED	BETWEEN CCT 11&12	NONE
93050-4506	93049-0092	NONE	NONE	⊕⊕⊕⊕⊕⊕⊕⊕⊕⊕⊕⊕ 1 2 3 4 5 6 7 8 9 10 11 12	NARROW	OPEN	NONE	NONE
93050-4507	93049-0012	NONE	a d f g i k m	a d f g i k m ⊕⊕⊕⊕⊕⊕⊕⊕⊕⊕⊕⊕ 1 2 3 4 5 6 7 8 9 10 11 12	OPEN	OPEN	NONE	RED
93050-4508	93049-0012	NONE	NONE	⊕⊕⊕⊕⊕⊕⊕⊕⊕⊕⊕⊕ 1 2 3 4 5 6 7 8 9 10 11 12	OPEN	OPEN	NONE	RED
93050-4509	93049-0012	CCT 1, 2	a d f g i k m	a d f g i k m ++⊕⊕⊕⊕⊕⊕⊕⊕⊕⊕ 1 2 3 4 5 6 7 8 9 10 11 12	OPEN	OPEN	NONE	GREEN
93050-4510	93049-0132	NONE	NONE	⊕⊕⊕⊕⊕⊕⊕⊕⊕⊕⊕⊕ 1 2 3 4 5 6 7 8 9 10 11 12	CLOSED	CLOSED	BETWEEN CCT 1&2	NONE

13 CIRCUIT

PART NUMBER	HOUSING USED	TERMINAL VOID POSITION	REMOVED POSITION KEYS	CONFIGURATION	FIRST ENDWALL	LAST ENDWALL	POLARIZING RIB BETWEEN	COLOUR STRIPE
93050-5001	93049-0013	NONE	NONE	⊕⊕⊕⊕⊕⊕⊕⊕⊕⊕⊕⊕⊕ 1 2 3 4 5 6 7 8 9 10 11 12 13	OPEN	OPEN	NONE	NONE
93050-5002	93049-0213	CCT 2,5,7,12	a n	a n ⊕+⊕⊕+⊕+⊕⊕⊕⊕+⊕ 1 2 3 4 5 6 7 8 9 10 11 12 13	OPEN	OPEN	BETWEEN CCT 2&3	NONE
93050-5003	93049-0053	NONE	NONE	⊕⊕⊕⊕⊕⊕⊕⊕⊕⊕⊕⊕⊕ 1 2 3 4 5 6 7 8 9 10 11 12 13	OPEN	CLOSED	NONE	NONE
93050-5004	93049-0013	CCT 4,6,8,10,12	NONE	⊕⊕⊕+⊕+⊕+⊕+⊕+⊕ 1 2 3 4 5 6 7 8 9 10 11 12 13	OPEN	OPEN	NONE	NONE
93050-5005	93049-0033	NONE	NONE	⊕⊕⊕⊕⊕⊕⊕⊕⊕⊕⊕⊕⊕ 1 2 3 4 5 6 7 8 9 10 11 12 13	CLOSED	CLOSED	NONE	NONE
93050-5006	93049-0013	CCT 9,10,11	NONE	⊕⊕⊕⊕⊕⊕⊕+++⊕⊕ 1 2 3 4 5 6 7 8 9 10 11 12 13	OPEN	OPEN	NONE	NONE

NOTES

1. + DENOTES TERMINAL VOIDED POSITION
   ⊕ DENOTES TERMINAL LOADED POSITION
   | DENOTES POLARIZING RIB POSITION
2. MOLEX HOUSING NO. FOR REFERENCE ONLY

QUALITY SYMBOLS: E A = 0; E C = 0; E D = 0; ▼ = 0; E F = 0; ☒ = 0; ■ = 0; E B = 0

NEW PART# ADDED — EC NO: 120091 2017/07/31; DRWN: BODEA 2017/09/07; CHK'D: ZCRAMER 2017/09/07; APPR: BRUTTLE 2017/09/07

REV: H

THIS DRAWING CONTAINS INFORMATION THAT IS PROPRIETARY TO MOLEX ELECTRONIC TECHNOLOGIES, LLC AND SHOULD NOT BE USED WITHOUT WRITTEN PERMISSION

GENERAL TOLERANCES (UNLESS SPECIFIED): ANGULAR TOL ± 0.5 °; 4 PLACES ±; 3 PLACES ± 0.05; 2 PLACES ± 0.1; 1 PLACE ± 0.2; 0 PLACES ±

DRAFT WHERE APPLICABLE MUST REMAIN WITHIN DIMENSIONS

DIMENSION UNITS: mm — SCALE: 1:1

DRWN BY: CFISHER01 — DATE: 2015/11/24

CHK'D BY: CMONAHAN — DATE: 2016/01/19

APPR BY: MSHANAHAN — DATE: 2016/01/20

DRAWING SIZE: A2 — THIRD ANGLE PROJECTION

molex

APPLI-MATE 2.5 FEMALE G.W.T. 750 VERSION

PRODUCT CUSTOMER DRAWING

SERIES	MATERIAL NUMBER	CUSTOMER
93050	SEE SHEETS	GENERAL MARKET

DOCUMENT NUMBER	DOC TYPE	DOC PART	SHEET NUMBER
930500001	PSD	000	16 OF 17

RELEASE STATUS	P1	RELEASE DATE	07.09.2017 16:24:01

FORMAT: molex-tb-prod-A2 REVISION: D DATE: 2015/09/04

14 CIRCUIT

PART NUMBER	HOUSING USED	TERMINAL VOID POSITION	REMOVED POSITION KEYS	CONFIGURATION	FIRST ENDWALL	LAST ENDWALL	POLARIZING RIB BETWEEN	COLOUR STRIPE
93050-5501	93049-0014	NONE	NONE	1 2 3 4 5 6 7 8 9 10 11 12 13 14	OPEN	OPEN	NONE	NONE
93050-5502	93049-1434	NONE	NONE	1 2 3 4 5 6 7 8 9 10 11 12 13 14	CLOSED	CLOSED	BETWEEN CCT 13&14	NONE
93050-5503	93049-0014	7, 8, 9, 10	ALL	a b c d e f g h i j k l m n o 1 2 3 4 5 6 7 8 9 10 11 12 13 14	OPEN	OPEN	NONE	BLUE
93050-5504	93049-0034	NONE	NONE	1 2 3 4 5 6 7 8 9 10 11 12 13 14	CLOSED	CLOSED	NONE	NONE
93050-5505	93049-0134	NONE	NONE	1 2 3 4 5 6 7 8 9 10 11 12 13 14	CLOSED	CLOSED	BETWEEN CCT 1&2	NONE

15 CIRCUIT

PART NUMBER	HOUSING USED	TERMINAL VOID POSITION	REMOVED POSITION KEYS	CONFIGURATION	FIRST ENDWALL	LAST ENDWALL	POLARIZING RIB BETWEEN	COLOUR STRIPE
93050-6001	93049-0015	NONE	NONE	1 2 3 4 5 6 7 8 9 10 11 12 13 14 15	OPEN	OPEN	NONE	NONE
93050-6002	93049-0215	CCT 10,12,14	NONE	1 2 3 4 5 6 7 8 9 10 11 12 13 14 15	OPEN	OPEN	BETWEEN CCT 2&3	NONE
93050-6003	93049-0035	NONE	NONE	1 2 3 4 5 6 7 8 9 10 11 12 13 14 15	CLOSED	CLOSED	NONE	NONE

16 CIRCUIT

PART NUMBER	HOUSING USED	TERMINAL VOID POSITION	REMOVED POSITION KEYS	CONFIGURATION	FIRST ENDWALL	LAST ENDWALL	POLARIZING RIB BETWEEN	COLOUR STRIPE
93050-6501	93049-0016	NONE	NONE	1 2 3 4 5 6 7 8 9 10 11 12 13 14 15 16	OPEN	OPEN	NONE	NONE

17 CIRCUIT

PART NUMBER	HOUSING USED	TERMINAL VOID POSITION	REMOVED POSITION KEYS	CONFIGURATION	FIRST ENDWALL	LAST ENDWALL	POLARIZING RIB BETWEEN	COLOUR STRIPE
93050-7001	93049-0017	NONE	NONE	1 2 3 4 5 6 7 8 9 10 11 12 13 14 15 16 17	OPEN	OPEN	NONE	NONE

18 CIRCUIT

PART NUMBER	HOUSING USED	TERMINAL VOID POSITION	REMOVED POSITION KEYS	CONFIGURATION	FIRST ENDWALL	LAST ENDWALL	POLARIZING RIB BETWEEN	COLOUR STRIPE
93050-7501	93049-0018	NONE	NONE	1 2 3 4 5 6 7 8 9 10 11 12 13 14 15 16 17 18	OPEN	OPEN	NONE	NONE

19 CIRCUIT

PART NUMBER	HOUSING USED	TERMINAL VOID POSITION	REMOVED POSITION KEYS	CONFIGURATION	FIRST ENDWALL	LAST ENDWALL	POLARIZING RIB BETWEEN	COLOUR STRIPE
93050-8001	93049-0019	NONE	NONE	1 2 3 4 5 6 7 8 9 10 11 12 13 14 15 16 17 18 19	OPEN	OPEN	NONE	NONE

20 CIRCUIT

PART NUMBER	HOUSING USED	TERMINAL VOID POSITION	REMOVED POSITION KEYS	CONFIGURATION	FIRST ENDWALL	LAST ENDWALL	POLARIZING RIB BETWEEN	COLOUR STRIPE
93050-8501	93049-0020	NONE	NONE	1 2 3 4 5 6 7 8 9 10 11 12 13 14 15 16 17 18 19 20	OPEN	OPEN	NONE	NONE
93050-8502	93049-0520	NONE	NONE	1 2 3 4 5 6 7 8 9 10 11 12 13 14 15 16 17 18 19 20	OPEN	OPEN	BETWEEN CCT 5&6	NONE
93050-8503	93049-0380	NONE	NONE	1 2 3 4 5 6 7 8 9 10 11 12 13 14 15 16 17 18 19 20	CLOSED	OPEN	BETWEEN CCT 3&4	NONE
93050-8504	93049-0380	NONE	NONE	1 2 3 4 5 6 7 8 9 10 11 12 13 14 15 16 17 18 19 20	CLOSED	OPEN	BETWEEN CCT 3&4	BLUE

NOTES

1. + DENOTES TERMINAL VOIDED POSITION
   ⊕ DENOTES TERMINAL LOADED POSITION
   | DENOTES POLARIZING RIB POSITION
2. MOLEX HOUSING NO. FOR REFERENCE ONLY

THIS DRAWING CONTAINS INFORMATION THAT IS PROPRIETARY TO MOLEX ELECTRONIC TECHNOLOGIES, LLC AND SHOULD NOT BE USED WITHOUT WRITTEN PERMISSION

QUALITY SYMBOLS: A = 0, E = 0, F = 0, ▼ = 0, C = 0, ☒ = 0, ■ = 0, D = 0

REV H — NEW PART# ADDED — EC NO: 120091 2017/07/31; DRWN: BODEA 2017/09/07; CHK'D: ZCRAMER 2017/09/07; APPR: BRUTTLE

GENERAL TOLERANCES (UNLESS SPECIFIED): ANGULAR TOL ± 0.5 °; 4 PLACES ±; 3 PLACES ± 0.05; 2 PLACES ± 0.1; 1 PLACE ± 0.2; 0 PLACES ±

DRAFT WHERE APPLICABLE MUST REMAIN WITHIN DIMENSIONS

DIMENSION UNITS: mm — SCALE: 1:1

DRWN BY: CFISHER01 — DATE: 2015/11/24

CHK'D BY: CMONAHAN — DATE: 2016/01/19

APPR BY: MSHANAHAN — DATE: 2016/01/20

DRAWING SIZE: A2 — THIRD ANGLE PROJECTION

molex

APPLI-MATE 2.5 FEMALE G.W.T. 750 VERSION

PRODUCT CUSTOMER DRAWING

SERIES	MATERIAL NUMBER	CUSTOMER
93050	SEE SHEETS	GENERAL MARKET

DOCUMENT NUMBER	DOC TYPE	DOC PART	SHEET NUMBER
930500001	PSD	000	17 OF 17

RELEASE STATUS: P1 — RELEASE DATE: 07.09.2017 16:24:01

FORMAT: master-tb-prod-A2
REVISION: D
DATE: 2015/09/04