CKT. SIZE		MATERIAL NUMBER	DIM. "A"	DIM. "B"	DIM. "C"	DIM. "D"	DIM. "E"	DIM. "F"	DIM. "G"	DIM. "H"	DIM. "J"	DIM. "K"	DIM. "L"	DIM. "M"	PACKAGING SPECIFICATION
4	X	44516-2002	25.9 (1.02)	9.60 (.378)	4.20 (.165)	N/A	4.50 (.177)	N/A	N/A	4.50 (.177)	N/A	4.80 (.189)	18.00 (.709)	7.60 (.299)	PK-44516-002
6		44516-2003	30.10 (1.185)	13.80 (.543)	8.40 (.331)	N/A	4.50 (.177)	N/A	N/A	4.50 (.177)	N/A	6.90 (.272)	22.20 (.874)	11.80 (.465)	PK-44516-002
8	X	44516-2004	34.3 (1.35)	18.00 (.709)	12.60 (.496)	N/A	6.11 (.240)	N/A	4.50 (.177)	N/A	4.50 (.177)	9.00 (.354)	26.40 (1.039)	16.00 (.630)	PK-44516-002
10	X	44516-2005	38.5 (1.52)	22.20 (.874)	16.80 (.661)	N/A	6.11 (.240)	N/A	4.50 (.177)	N/A	4.50 (.177)	11.10 (.437)	30.60 (1.205)	20.20 (.795)	PK-44516-002
12	X	44516-2006	42.70 (1.681)	26.40 (1.039)	21.00 (.827)	6.11 (.240)	N/A	6.11 (.240)	4.50 (.177)	N/A	4.50 (.177)	N/A	34.80 (1.370)	24.40 (.961)	PK-44516-002
14	X	44516-2007	46.9 (1.85)	30.60 (1.205)	25.20 (.992)	6.11 (.240)	3.59 (.141)	6.11 (.240)	4.50 (.177)	3.59 (.141)	4.50 (.177)	15.30 (.602)	39.00 (1.535)	28.60 (1.126)	PK-44516-005
16	X	44516-2008	51.1 (2.01)	34.80 (1.370)	29.40 (1.157)	6.11 (.240)	4.50 (.177)	6.11 (.240)	4.50 (.177)	4.50 (.177)	4.50 (.177)	17.40 (.685)	43.20 (1.701)	32.80 (1.291)	PK-44516-002

"X" = NOT TOOLED

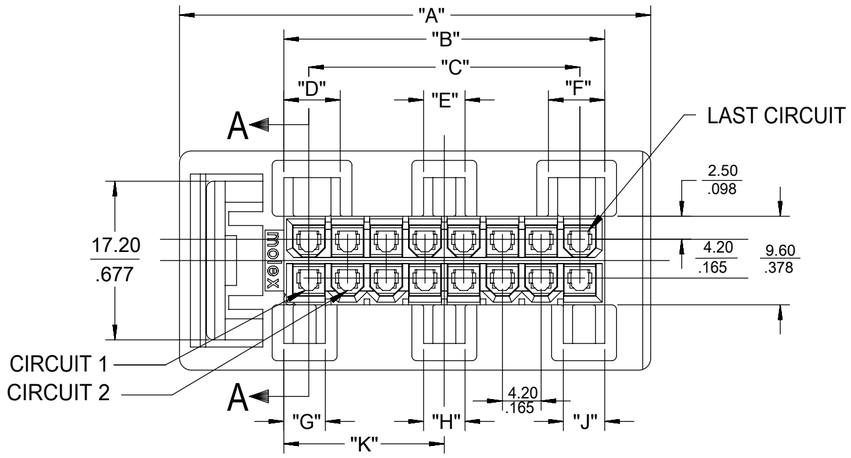

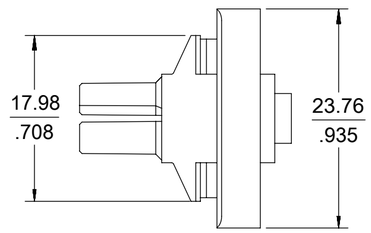

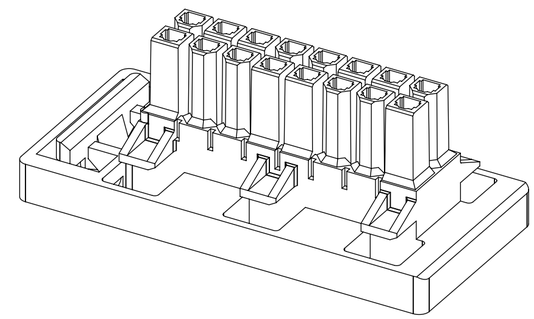

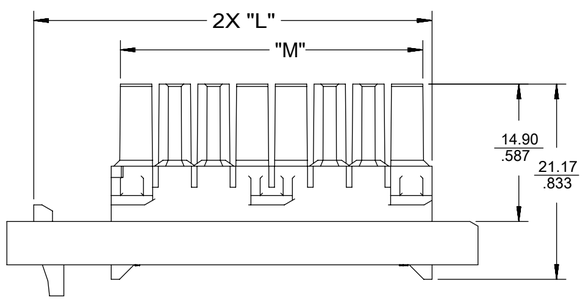

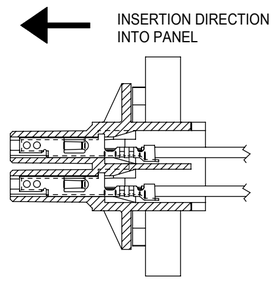

SECTION "A-A"

TERMINAL ORIENTATION

NOTES:

1. MATERIAL:
   NYLON, UL94V-2, COLOR:BLACK, IEC 60335-1, 5TH EDITION, GLOW WIRE CAPABLE
2. FINISH: N/A
3. PRODUCT SPECIFICATION: PS-5556-002
4. PACKAGING SPECIFICATION: SEE CHART
5. PART MATES WITH MINI-FIT B.M.I. PLUG #42475, AND HEADERS 42404, 42440, 44068, 43879, 43810.
6. A MAXIMUM TOLERANCE OF 1.27/(.050) ALLOWS FOR 2 POINTS OF ELECTRICAL CONTACT. A MAXIMUM TOLERANCE OF .51/(.020) ALLOWS FOR 4 POINTS OF CONTACT.
7. PART TO BE USED WITH MOLEX FEMALE TERMINAL #5556 OR 45750.
8. WIRES TO BE DRESSED IN SUCH A MANNER TO ALLOW THE TERMINALS TO FLOAT FREELY IN THE POCKETS AND THE CONNECTOR TO FLOAT FREELY IN THE PANEL.
9. CONNECTOR ASSEMBLIES ARE NOT TO BE MATED OR UNMATED WHILE CIRCUITS ARE LIVE.
10. PANEL SHOULD BE PUNCHED IN THE DIRECTION OPPOSITE OF CONNECTOR INSERTION.
11. THIS PART IS NOT INTENDED TO PROVIDE ANY ALIGNMENT OF CUSTOMER COMPONETS OR MODULES, SUCH AS POWER SUPPLIES AND CHASSIS.
12. SEE SHEET 2 FOR PANEL CUTOUT DIMENSIONS. PANEL CUTOUT DIMENSIONS HAVE A TOLERANCEOF ± .076/(.003).
13. MOLEX RECOMMENDS 1.57/1.19/(.062/.047) MAX./MIN. PANEL THICKNESS.
14. IT IS THE RESPONSIBILITY OF THE CUSTOMER TO ENSURE THAT THE PANEL TO WHICH THE RECEPTACLE IS MOUNTED IS SUFFICIENTLY SUPPORTED SO THAT FLEXING OF THE PANEL DURING MATING DOES NOT PREVENT THE CONNECTOR SYSTEMFROM BEING FULLY MATED.
15. THIS PART IS NOT INTENDED TO ACT AS A HARD STOP FOR CUSTOMER COMPONENTS.
16. THIS CONNECTOR ALLOWS FOR 1.27/(.050) MAX. MISALIGNMENT IN ANY DIRETION
17. PART CONFORMS TO CLASS "B" REQUIREMENTS OF COSMETIC SPECIFICATION PS-45499-002 WITH THE EXCEPTION OF DISCOLORATION, SINK, & FLASH MEETS CLASS "C" REQUIREMENTS.

QUALITY SYMBOLS	
EA	= 0
EC	= 0
EP	= 0
▼	= 0
C	= 0
☒	= 0
■	= 0
▽	= 0

CORRECT NOTE 7

EC NO: 113520 2017/02/15
DRWN: CSLAFTER 2017/02/15
CHKD: JBELL 2017/02/20
APPR: FSMITH
REV A1

GENERAL TOLERANCES (UNLESS SPECIFIED)

	MM	INCH
4 PLACES	±	±
3 PLACES	±	± .010
2 PLACES	± 0.25	± .014
1 PLACES	± 0.35	±
0 PLACES	±	±

ANGULAR TOL ± 1/2

DRAFT WHERE APPLICABLE MUST REMAIN WITHIN DIMENSIONS

DIMENSION UNITS: MM/IN
SCALE: 2:1
DRWN BY: HRIBAR DATE: 01/08/21
CHECKED BY: BANDURA DATE: 01/08/21
APPR BY: MARGULIS DATE: 01/08/21
DRAWING SIZE: C
THIRD ANGLE PROJECTION

THIS DRAWING CONTAINS INFORMATION THAT IS PROPRIETARY TO MOLEX ELECTRONIC TECHNOLOGIES, LLC AND SHOULD NOT BE USED WITHOUT WRITTEN PERMISSION

molex®

PANEL-MOUNT RECEPTACLE,
4-16 CKT. BLIND MATE, MINI-FIT SLIDE 'N' LOCK
GLOWWIRE

PRODUCT CUSTOMER DRAWING

SERIES	MATERIAL NUMBER	CUSTOMER
44516	SEE CHART	GENERAL MARKET

DOCUMENT NUMBER	DOC TYPE	DOC PART	SHEET NUMBER
445160004-SD	PSD	000	1 OF 2

RELEASE STATUS	P1	RELEASE DATE	20.02.2017	17:46:19

FORMAT: Eng-tega-master-lb-prod-C
REVISION: B
DATE: 2015/11/19

TOP VIEWS

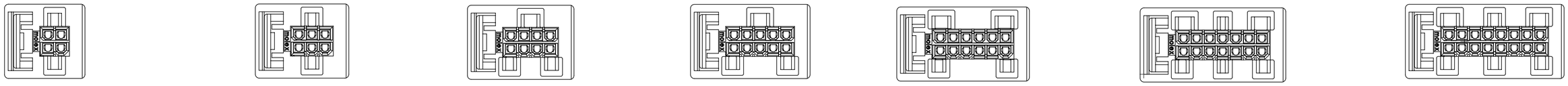

4 CIRCUIT | 6 CIRCUIT | 8 CIRCUIT | 10 CIRCUIT | 12 CIRCUIT | 14 CIRCUIT | 16 CIRCUIT

RECOMMENDED PANEL CUTOUTS VIEWED FROM MATING SIDE (10) (12) (13)

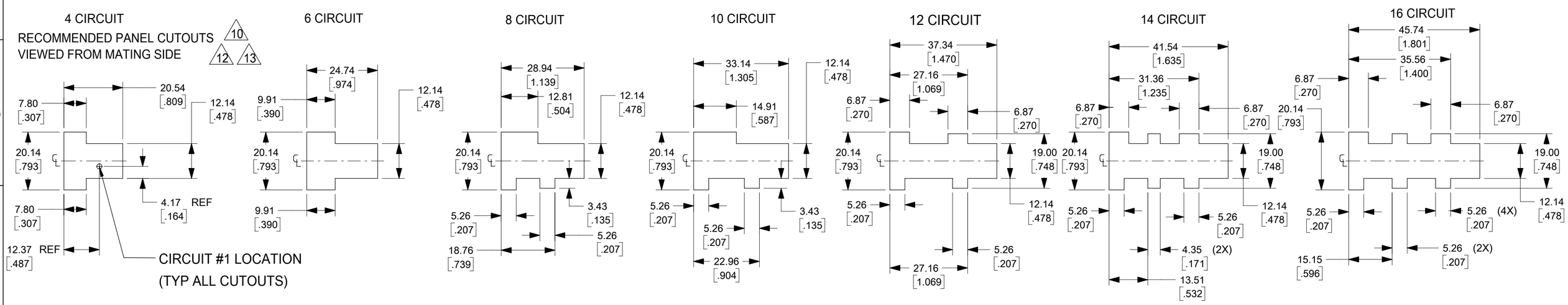

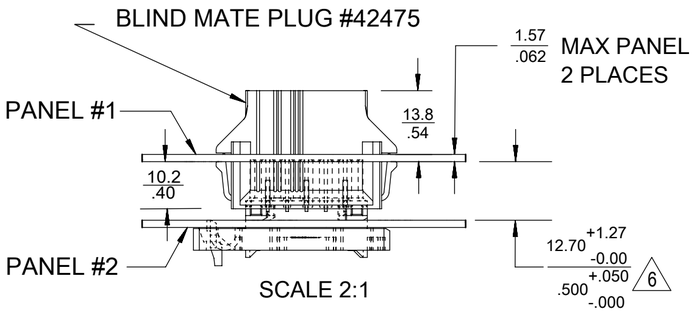

SCALE 2:1

PANEL-TO-PANEL
APPLICATION #1

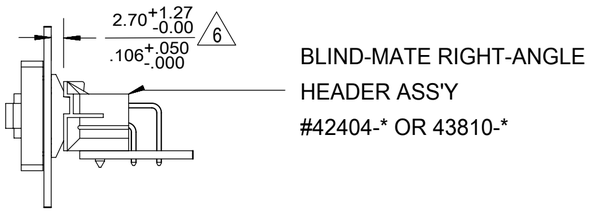

SCALE 2:1

PANEL-TO-P.C. BOARD
APPLICATION #3

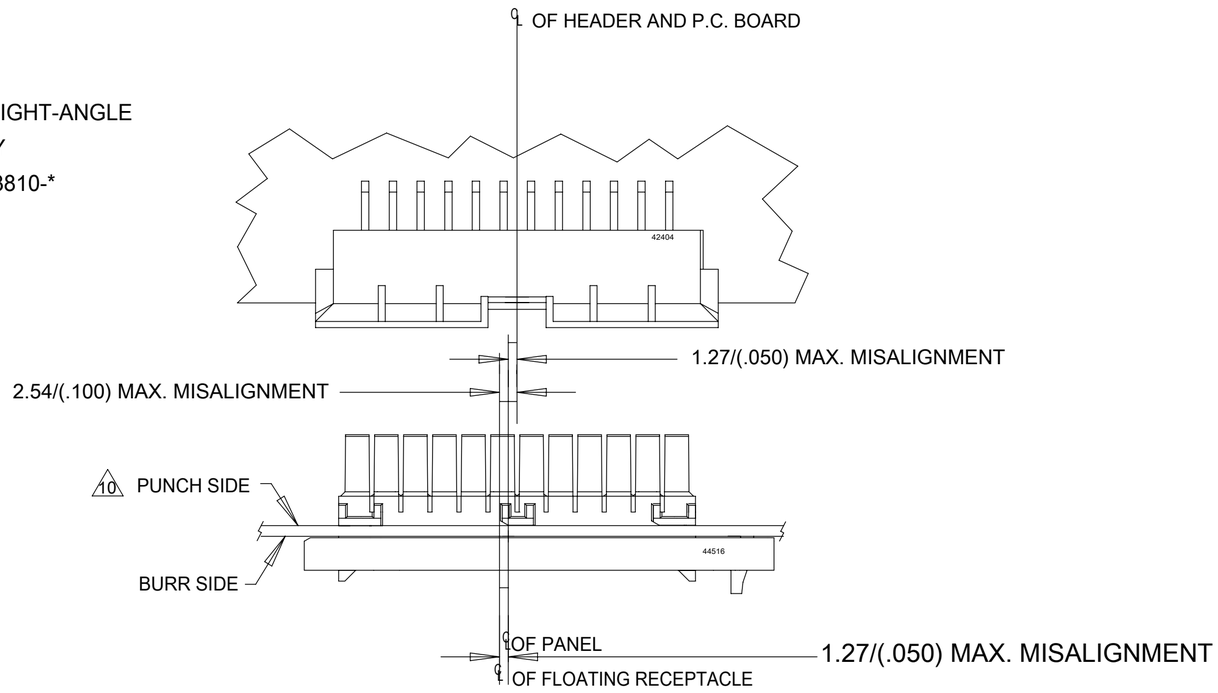

SCALE 2:1

ALIGNMENT TOLERANCES FOR 1.27/(.050) MAX. BOARD TO PANEL MISALIGNMENT
1.27/(.050) RECEPTACLE FLOAT.

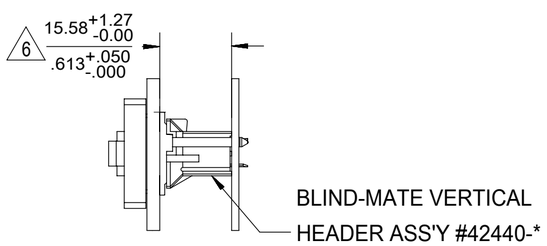

SCALE 2:1

PANEL-TO-P.C. BOARD
APPLICATION #2

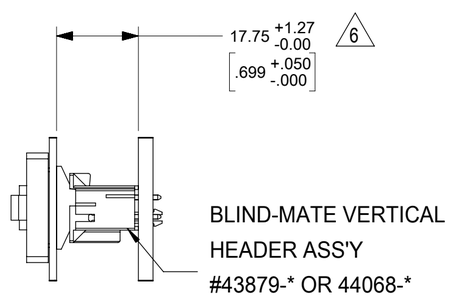

SCALE 2:1

PANEL-TO-P.C. BOARD
APPLICATION #4

QUALITY SYMBOLS	
(FA)	= 0
(FC)	= 0
(FP)	= 0
▼	= 0
(C)	= 0
☒	= 0
■	= 0
▽	= 0

THIS DRAWING CONTAINS INFORMATION THAT IS PROPRIETARY TO MOLEX ELECTRONIC TECHNOLOGIES, LLC AND SHOULD NOT BE USED WITHOUT WRITTEN PERMISSION

CORRECT NOTE 7
EC NO: 113520 2017/02/15
DRWN: CSLAFTER 2017/02/15
CHK'D: JBELL 2017/02/20
APPR: FSMITH

GENERAL TOLERANCES (UNLESS SPECIFIED)	MM	INCH
4 PLACES	±	±
3 PLACES	±	± .010
2 PLACES	± 0.25	± .014
1 PLACES	± 0.35	±
0 PLACES	±	±
ANGULAR TOL ± 1/2		
DRAFT WHERE APPLICABLE MUST REMAIN WITHIN DIMENSIONS		

A1 REV

DIMENSION UNITS	MM/IN
SCALE	1:1
DRWN BY	HRIBAR
DATE	01/08/21
CHK'D BY	BANDURA
DATE	01/08/21
APPR BY	MARGULIS
DATE	01/08/21
DRAWING SIZE	C
THIRD ANGLE PROJECTION	

molex®

PANEL-MOUNT RECEPTACLE,
4-16 CKT. BLIND MATE, MINI-FIT SLIDE 'N' LOCK
GLOWWIRE

PRODUCT CUSTOMER DRAWING

SERIES	MATERIAL NUMBER	CUSTOMER
44516	SEE CHART	GENERAL MARKET

DOCUMENT NUMBER	DOC TYPE	DOC PART	SHEET NUMBER
445160004-SD	PSD	000	2 OF 2

RELEASE STATUS	P1	RELEASE DATE	20.02.2017	17:46:19

FORMAT: Eng-tega-master-tb-prod-C
REVISION: B
DATE: 2015/11/19