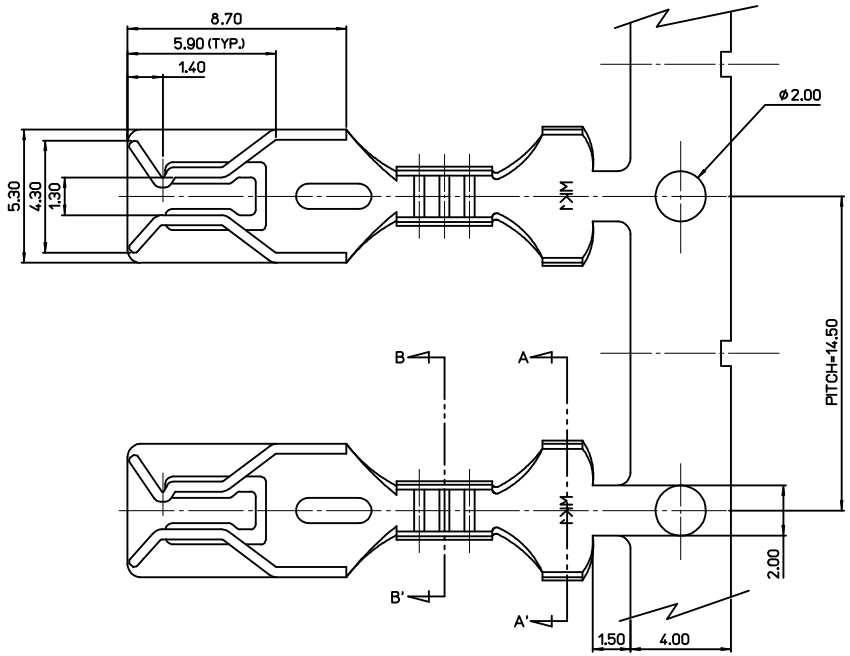

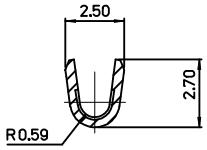

SECTION B-B'

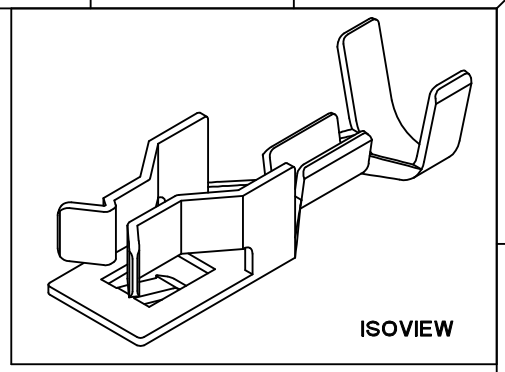

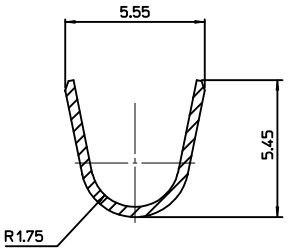

SECTION A-A'

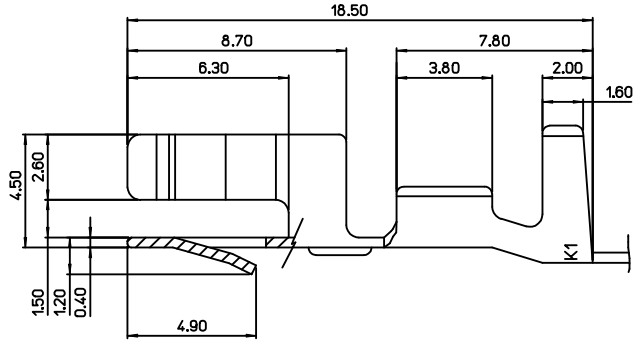

NOTES

1. MATERIAL : BRASS(C26000)
2. FINISH : PRE-TIN PLATING
3. APPLICABLE HOUSING SOCKET : 68147,49505
4. APPLICABLE WIRE SEAL : 49505-9001
5. WEDGE BULB INSERTION FORCE : 3.5 Kgf MAX.
   WEDGE BULB RETENSION FORCE : 0.5 Kgf MIN.
6. APPLICABLE WEDGE BASE CAP : W2.1X9.5d(W5W,W16W)
7. APPLICABLE WIRE SIZE : AVS 0.5~0.85SQ, FLRY-A 0.75SQ

<TABLE 1>

354779002	35477-9002
MATERIAL NO.	ORDER NO.

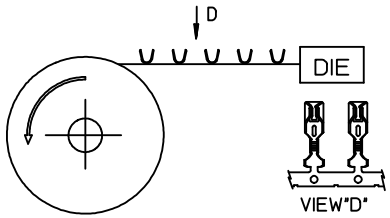

REEL DIRECTIONS

REVISED
EC NO: KTR2015-0116 2015/06/16
DRWN: JKSE001
CHKD:
APPR: JYCHOI 2015/06/22
DESCRIPTION
REV
H1

QUALITY SYMBOLS
▼=0
Ⓒ=0

GENERAL TOLERANCES (UNLESS SPECIFIED)

	mm	INCH
4 PLACES	± ---	± ---
3 PLACES	± ---	± ---
2 PLACES	± 0.2	± ---
1 PLACE	± ---	± ---
ANGULAR ± 1 °		

DRAFT WHERE APPLICABLE MUST REMAIN WITHIN DIMENSIONS

DIMENSION STYLE: MM ONLY
SCALE: 5:1
DESIGN UNITS: METRIC
THIRD ANGLE PROJECTION

		DATE
DRAWN BY	SMKIM	2005/08/09
CHECKED BY	BCYOON	2005/08/09
APPROVED BY	CWLEE	2005/08/09

TITLE: WEDGE TERMINAL

molex MOLEX INCORPORATED

MATERIAL NO.: SEE TABLE 1
DOCUMENT NO.: SD-35477-001
SHEET NO.: 1 OF 1
SIZE: A3

THIS DRAWING CONTAINS INFORMATION THAT IS PROPRIETARY TO MOLEX INCORPORATED AND SHOULD NOT BE USED WITHOUT WRITTEN PERMISSION