molex

USCAR 38 WAY HYBRID RECEPTACLE SEALED ASSEMBLY (TYPE II)
BOM AND PIN OUT SHEET

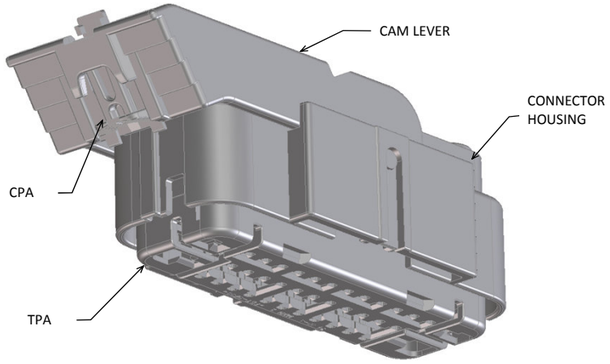

FOR ADDITIONAL INFORMATION SEE SD-31380-0001

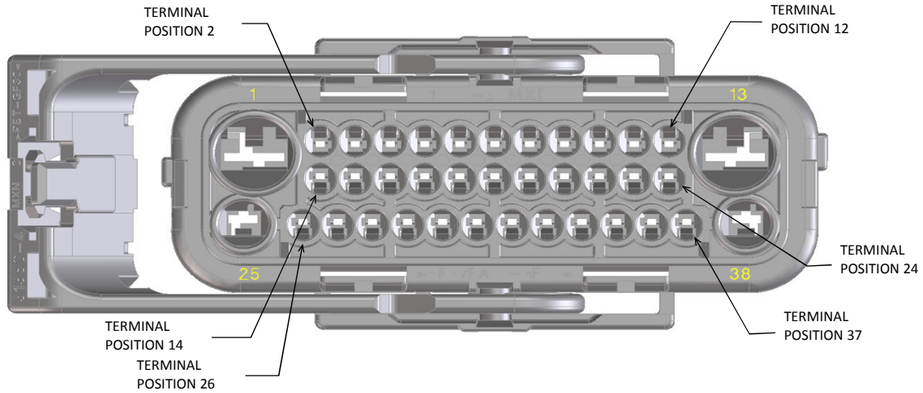

ABBREVIATION	DESCRIPTION	COLOR	MATERIAL
A2-BLK	HOUSING, KEYING OPTION A, TYPE II	BLACK	SPS/NYLON GF30
TPA-2	TPA, TYPE II	GRAY	PBT GF30
CL	CAM LEVER	BLACK	PBT GF30
CPA	CPA	RED	PPE/PA GF10
R	RING SEAL	RUST RED	INHERENTLY LUBRICATED SILICONE
CCW	COUNTERCLOCKWISE LEVER THROW		
CW	CLOCKWISE LEVER THROW		

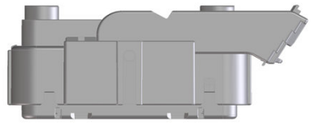

COUNTERCLOCKWISE LEVER THROW

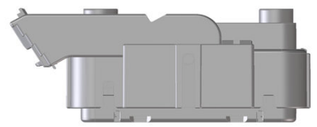

CLOCKWISE LEVER THROW

ASSEMBLY DESCRIPTION	ASSEMBLY PART NUMBER	COMPONENT: THE PRESENCE OF AN ABBREVIATION INDICATES THE PRESENCE OF THAT COMPONENT.						BLOCKED TERMINALS: CAVITY WITH A NUMBER INDICATES BLOCKED TERMINAL POSITION; CAVITY WITHOUT A NUMBER INDICATES OPEN TERMINAL POSITION																																					STATUS	COMMENTS	WIRE SHIELD SHIPPED SEPERATELY
		HOUSING KEY/COLOR	TPA	CAM LEVER	CPA	RING SEAL	LEVER THROW	2	3	4	5	6	7	8	9	10	11	12	14	15	16	17	18	19	20	21	22	23	24	26	27	28	29	30	31	32	33	34	35	36	37			
KEY A, BLACK, CCW THROW	31380-1000	A2-BLK	TPA-2	CL	CPA	R	CCW																																			SALEABLE		31382-1001
KEY A, BLACK, CCW THROW	31380-1001	A2-BLK	TPA-2	CL	CPA	R	CCW	2	3	4	5	6	7	8	9	10	11	12	14	15	16	17	18	19	20	21	22	23	24	26	27	28	29	30	31	32	33	34	35	36	37	SALEABLE		31382-1001
KEY A, BLACK, CCW THROW	31380-1003	A2-BLK	TPA-2	CL	CPA	R	CCW			4	5		7			10	11	12			16	17		19			22	23	24	26			29	30	31	32	33	34	35	36	37	SALEABLE		31382-1001
KEY A, BLACK, CCW THROW	31380-1004	A2-BLK	TPA-2	CL	CPA	R	CCW			4	5		7					12			16	17					22	23		26			29	30	31	32				36		SALEABLE		31382-1001
KEY A, BLACK, CCW THROW	31380-1005	A2-BLK	TPA-2	CL	CPA	R	CCW						7	8	9	10	11			15	16				20		22				27			30	31			34	35			SALEABLE		31382-1001
KEY A, BLACK, CCW THROW	31380-1008	A2-BLK	TPA-2	CL	CPA	R	CCW						7	8		10				15					20		22				27			30				34	35			SALEABLE		31382-1001
KEY A, BLACK, CCW THROW	31380-1009	A2-BLK	TPA-2	CL	CPA	R	CCW						7	8		10	11			15	16				20		22				27			30	31			34	35			SALEABLE		31382-1001
KEY A, BLACK, CCW THROW	31380-1010	A2-BLK	TPA-2	CL	CPA	R	CCW	2			5	6	7	8	9	10	11		14						20		22			26			29		31			34	35			SALEABLE		31382-1001
KEY A, BLACK, CCW THROW	31380-1011	A2-BLK	TPA-2	CL	CPA	R	CCW						7			10	11			15					20		22				27			30		32		34	35			SALEABLE		31382-1001
KEY A, BLACK, CCW THROW	31380-1014	A2-BLK	TPA-2	CL	CPA	R	CCW									10	11		14	15			18				22			26	27							34	35			SALEABLE		31382-1001
KEY A, BLACK, CCW THROW	31380-1015	A2-BLK	TPA-2	CL	CPA	R	CCW						7	8		10					16				20					26	27			30	31							SALEABLE		31382-1001
KEY A, BLACK, CCW THROW	31380-1016	A2-BLK	TPA-2	CL	CPA	R	CCW						7	8		10					16			19	20					26	27			30								SALEABLE		31382-1001
KEY A, BLACK, CW THROW	31380-1100	A2-BLK	TPA-2	CL	CPA	R	CW																																			SALEABLE		31382-1001
KEY A, BLACK, CW THROW	31380-1101	A2-BLK	TPA-2	CL	CPA	R	CW	2	3	4	5	6	7	8	9	10	11	12	14	15	16	17	18	19	20	21	22	23	24	26	27	28	29	30	31	32	33	34	35	36	37	SALEABLE		31382-1001
KEY A, BLACK, CW THROW	31380-1102	A2-BLK	TPA-2	CL	CPA	R	CW					6			9	10			14	15									24	26	27								35			SALEABLE		31382-1001
KEY A, BLACK, CW THROW	31380-1105	A2-BLK	TPA-2	CL	CPA	R	CW						7	8	9	10	11			15	16				20		22				27			30	31			34	35			SALEABLE		31382-1001
KEY A, BLACK, CW THROW	31380-1106	A2-BLK	TPA-2	CL	CPA	R	CW	2			5	6	7	8	9	10	11								20		22			26			29		31	32		34	35			SALEABLE		31382-1001
KEY A, BLACK, CW THROW	31380-1107	A2-BLK	TPA-2	CL	CPA	R	CW	2			5	6	7	8	9	10	11		14						20		22			26			29		31	32		34	35			SALEABLE		31382-1001
KEY A, BLACK, CW THROW	31380-1108	A2-BLK	TPA-2	CL	CPA	R	CW						7	8		10				15					20		22				27			30				34	35			SALEABLE		31382-1001
KEY A, BLACK, CW THROW	31380-1111	A2-BLK	TPA-2	CL	CPA	R	CW						7			10	11			15					20		22				27			30		32		34	35			SALEABLE		31382-1001
KEY A, BLACK, CW THROW	31380-1112	A2-BLK	TPA-2	CL	CPA	R	CW						7	8	9	10	11		14	15	16		18		20		22			26	27				31	32		34	35			SALEABLE		31382-1001
KEY A, BLACK, CW THROW	31380-1113	A2-BLK	TPA-2	CL	CPA	R	CW						7		9	10	11		14	15			18				22			26	27					32		34	35			SALEABLE		31382-1001
KEY A, BLACK, CW THROW	31380-1114	A2-BLK	TPA-2	CL	CPA	R	CW	2			5		7			10	11		14						20		22			26			29					34	35			SALEABLE		31382-1001
KEY A, BLACK, CCW THROW	31380-1115	A2-BLK	TPA-2	CL	CPA	R	CCW	2	3		5	6							14	15	16									26	27			30	31	32	33	34	35	36	37	SALEABLE		31382-1001
KEY A, BLACK, CW THROW	31380-1116	A2-BLK	TPA-2	CL	CPA	R	CW	2	3		5	6							14	15	16									26	27	28	29	30	31	32	33	34	35	36	37	SALEABLE		31382-1001

molex

USCAR 38 WAY HYBRID RECEPTACLE SEALED ASSEMBLY (TYPE I)
BOM AND PIN OUT SHEET

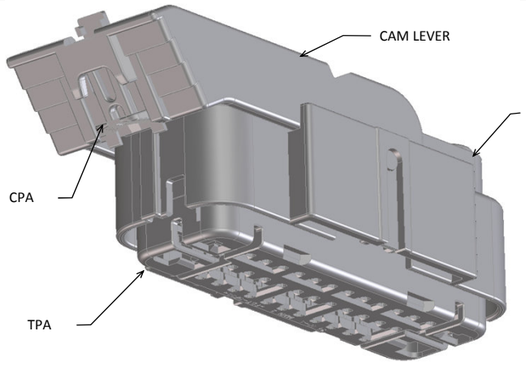

FOR ADDITIONAL INFORMATION SEE SD-31380-0001

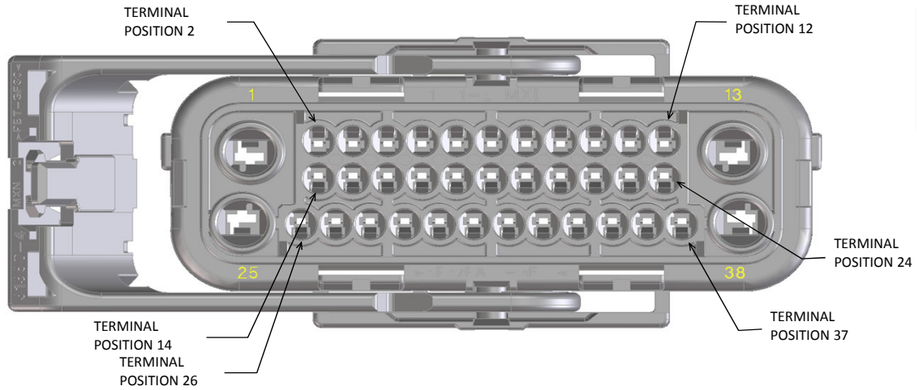

ABBREVIATION	DESCRIPTION	COLOR	MATERIAL
A1-BLK	HOUSING, KEYING OPTION A, TYPE I	BLACK	SPS/NYLON GF30
TPA-1	TPA, TYPE I	NATURAL	PBT GF30
CL	CAM LEVER	BLACK	PBT GF30
CPA	CPA	RED	PPE/PA GF10
R	RING SEAL	RUST RED	INHERENTLY LUBRICATED SILICONE
CCW	COUNTERCLOCKWISE LEVER THROW		
CW	CLOCKWISE LEVER THROW		

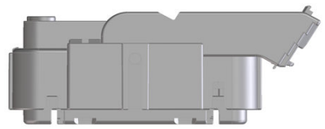

COUNTERCLOCKWISE LEVER THROW

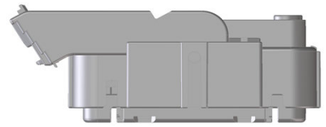

CLOCKWISE LEVER THROW

ASSEMBLY DESCRIPTION	ASSEMBLY PART NUMBER	COMPONENT: THE PRESENCE OF AN ABBREVIATION INDICATES THE PRESENCE OF THAT COMPONENT.						BLOCKED TERMINALS: CAVITY WITH A NUMBER INDICATES BLOCKED TERMINAL POSITION. CAVITY WITHOUT A NUMBER INDICATES OPEN TERMINAL POSITION																																					STATUS	COMMENTS	WIRE SHIELD SHIPPED SEPERATELY
		HOUSING KEY/COLOR	TPA	CAM LEVER	CPA	RING SEAL	LEVER THROW	2	3	4	5	6	7	8	9	10	11	12	14	15	16	17	18	19	20	21	22	23	24	26	27	28	29	30	31	32	33	34	35	36	37			
KEY A, BLACK, CCW THROW	31381-1000	A1-BLK	TPA-1	CL	CPA	R	CCW																																			SALEABLE		31382-1001
KEY A, BLACK, CCW THROW	31381-1001	A1-BLK	TPA-1	CL	CPA	R	CCW	2	3	4	5	6	7	8	9	10	11	12	14	15	16	17	18	19	20	21	22	23	24	26	27	28	29	30	31	32	33	34	35	36	37	SALEABLE		31382-1001
KEY A, BLACK, CCW THROW	31381-1002	A1-BLK	TPA-1	CL	CPA	R	CCW	2	3	4	5		7	8	9	10	11	12			16				20	21		23	24				29	30		32	33			36	37	SALEABLE		31382-1001
KEY A, BLACK, CCW THROW	31381-1003	A1-BLK	TPA-1	CL	CPA	R	CCW			4			7	8	9	10	11	12							20	21		23	24							32	33			36	37	SALEABLE		31382-1001
KEY A, BLACK, CCW THROW	31381-1005	A1-BLK	TPA-1	CL	CPA	R	CCW			4			7	8	9							17					22	23					29	30						36		SALEABLE		31382-1001
KEY A, BLACK, CCW THROW	31381-1006	A1-BLK	TPA-1	CL	CPA	R	CCW			4	5		7	8	9							17					22	23				28	29	30						36		SALEABLE		31382-1001
KEY A, BLACK, CCW THROW	31381-1009	A1-BLK	TPA-1	CL	CPA	R	CCW						7									17					22	23												36		SALEABLE		31382-1001
KEY A, BLACK, CCW THROW	31381-1010	A1-BLK	TPA-1	CL	CPA	R	CCW	2	3	4		6			9	10	11	12	14			17	18			21			24			28	29	30	31	32	33					SALEABLE		31382-1001
KEY A, BLACK, CCW THROW	31381-1011	A1-BLK	TPA-1	CL	CPA	R	CCW					6			9							17	18			21																SALEABLE		31382-1001
KEY A, BLACK, CCW THROW	31381-1012	A1-BLK	TPA-1	CL	CPA	R	CCW	2	3	4			7	8	9	10	11	12			16	17					22	23					29	30					35	36		SALEABLE		31382-1001
KEY A, BLACK, CCW THROW	31381-1013	A1-BLK	TPA-1	CL	CPA	R	CCW	2	3	4			7	8	9	10	11	12			16	17					22						29						35	36		SALEABLE		31382-1001
KEY A, BLACK, CCW THROW	31381-1014	A1-BLK	TPA-1	CL	CPA	R	CCW	2	3	4			7		9		11	12	14	15	16			19						26	27	28	29	30	31	32	33	34	35	36	37	SALEABLE		31382-1001
KEY A, BLACK, CCW THROW	31381-1015	A1-BLK	TPA-1	CL	CPA	R	CCW		3	4			7	8	9							17					22	23					29	30						36		SALEABLE		31382-1001
KEY A, BLACK, CCW THROW	31381-1016	A1-BLK	TPA-1	CL	CPA	R	CCW		3	4			7	8	9							17					22	23					29	30								SALEABLE		31382-1001
KEY A, BLACK, CCW THROW	31381-1017	A1-BLK	TPA-1	CL	CPA	R	CCW					6			9							17	18			21						28	29	30	31	32	33					SALEABLE		31382-1001
KEY A, BLACK, CCW THROW	31381-1018	A1-BLK	TPA-1	CL	CPA	R	CCW		3		5		7								16	17					22	23												36		SALEABLE		31382-1001
KEY A, BLACK, CCW THROW	31381-1020	A1-BLK	TPA-1	CL	CPA	R	CCW	2		4			7		9	10	11	12	14	15	16			19	20		22	23	24	26	27	28	29	30	31	32	33	34	35	36	37	SALEABLE		31382-1001
KEY A, BLACK, CCW THROW	31381-1021	A1-BLK	TPA-1	CL	CPA	R	CCW	2	3	4			7		9	10	11	12			16	17					22	23				28	29	30								SALEABLE		31382-1001
KEY A, BLACK, CCW THROW	31381-1022	A1-BLK	TPA-1	CL	CPA	R	CCW	2		4			7		9				14					19						26	27	28	29	30	31	32	33	34	35	36	37	SALEABLE		31382-1001
KEY A, BLACK, CCW THROW	31381-1023	A1-BLK	TPA-1	CL	CPA	R	CCW	2		4			7		9		11		14					19						26	27	28	29	30	31	32	33	34	35	36	37	SALEABLE		31382-1001
KEY A, BLACK, CCW THROW	31381-1024	A1-BLK	TPA-1	CL	CPA	R	CCW	2		4			7		9		11		14	15	16			19						26	27	28	29	30	31	32	33	34	35	36	37	SALEABLE		31382-1001
KEY A, BLACK, CCW THROW	31381-1025	A1-BLK	TPA-1	CL	CPA	R	CCW						7	8		10					16			19	20					26	27			30								SALEABLE		31382-1001
KEY A, BLACK, CCW THROW	31381-1026	A1-BLK	TPA-1	CL	CPA	R	CCW	2					7		9	10			14	15	16			19	20		22	23	24	26	27	28	29	30	31	32	33	34	35	36	37	SALEABLE		31382-1001
KEY A, BLACK, CCW THROW	31381-1027	A1-BLK	TPA-1	CL	CPA	R	CCW		3	4	5		7	8	9		11					17					22	23				28	29	30								SALEABLE		31382-1001
KEY A, BLACK, CCW THROW	31381-1028	A1-BLK	TPA-1	CL	CPA	R	CCW		3	4			7	8	9		11					17					22	23					29	30								SALEABLE		31382-1001
KEY A, BLACK, CCW THROW	31381-1029	A1-BLK	TPA-1	CL	CPA	R	CCW	2			5		7			10	11		14						20		22			26			29			32		34	35			SALEABLE		31382-1001
KEY A, BLACK, CCW THROW	31381-1030	A1-BLK	TPA-1	CL	CPA	R	CCW	2			5		7			10	11		14						20		22			26			29					34	35			SALEABLE		31382-1001
KEY A, BLACK, CCW THROW	31381-1031	A1-BLK	TPA-1	CL	CPA	R	CCW	2	3	4			7		9		11	12	14	15	16			19					24	26	27	28	29	30	31	32	33	34	35	36	37	SALEABLE		31382-1001
KEY A, BLACK, CCW THROW	31381-1032	A1-BLK	TPA-1	CL	CPA	R	CCW	2			5		7	8	9	10			14			17		19	20	21	22	23	24	26	27	28	29	30	31	32	33	34	35	36	37	SALEABLE		31382-1001
KEY A, BLACK, CW THROW	31381-1100	A1-BLK	TPA-1	CL	CPA	R	CW																																			SALEABLE		31382-1001
KEY A, BLACK, CW THROW	31381-1101	A1-BLK	TPA-1	CL	CPA	R	CW	2	3	4	5	6	7	8	9	10	11	12	14	15	16	17	18	19	20	21	22	23	24	26	27	28	29	30	31	32	33	34	35	36	37	SALEABLE		31382-1001
KEY A, BLACK, CW THROW	31381-1119	A1-BLK	TPA-1	CL	CPA	R	CW	2		4			7		9		11		14	15	16			19						26	27	28	29	30	31	32	33	34	35	36	37	SALEABLE		31382-1001
KEY A, BLACK, CW THROW	31381-1121	A1-BLK	TPA-1	CL	CPA	R	CW				5	6		8		10						17	18		20	21	22	23	24													SALEABLE		31382-1001
KEY A, BLACK, CW THROW	31381-1122	A1-BLK	TPA-1	CL	CPA	R	CW	2	3	4			7		9		11	12	14	15	16			19						26	27	28	29	30	31	32	33	34	35	36	37	SALEABLE		31382-1001
KEY A, BLACK, CCW THROW	31381-1123	A1-BLK	TPA-1	CL	CPA	R	CCW	2					7		9				14					19						26	27	28	29	30	31	32	33	34	35	36	37	SALEABLE		31382-1001
KEY A, BLACK, CCW THROW	31381-1124	A1-BLK	TPA-1	CL	CPA	R	CCW		3	4		6					11	12		15	16		18																			SALEABLE		31382-1001