| ASSEMBLY MATERIAL NUMBER | TERMINAL PLATING | POTTING |
|---|---|---|
| 194280003 | TIN | NO |
| 194280021 | TIN/GOLD | |
| 194280046 | TIN | YES |
| 194280047 | TIN/GOLD | |

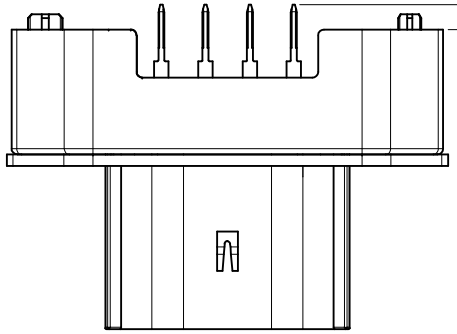

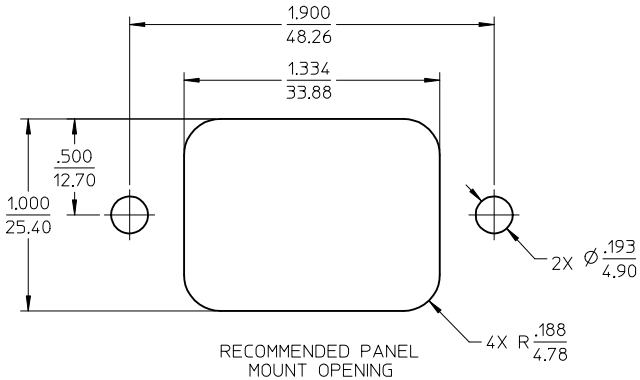


RECOMMENDED PANEL
MOUNT OPENING
MAX PANEL THK .080/2.03

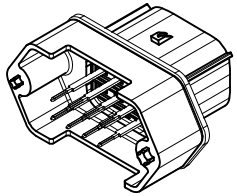

ASSEMBLED VIEW
SCALE 1:1

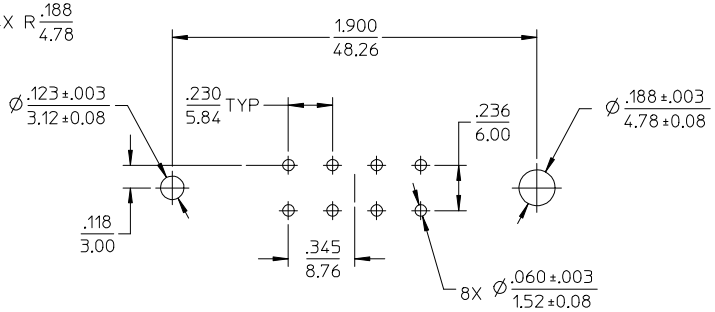


RECOMMENDED PCB LAYOUT
COMPONENT SIDE

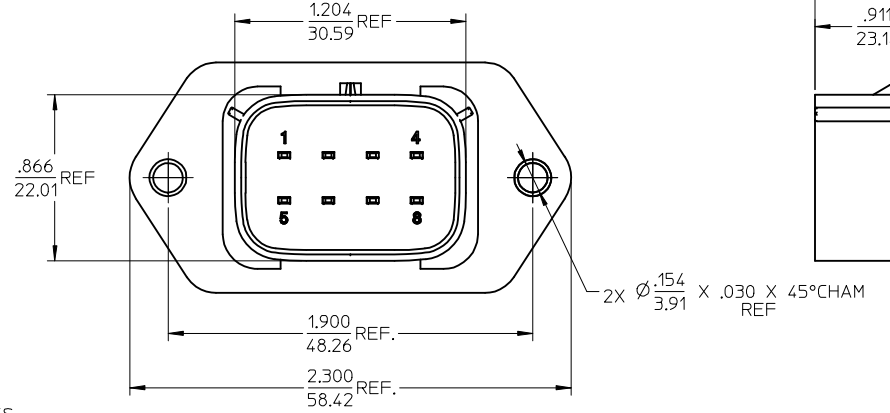


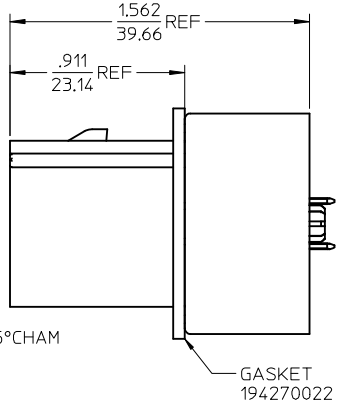


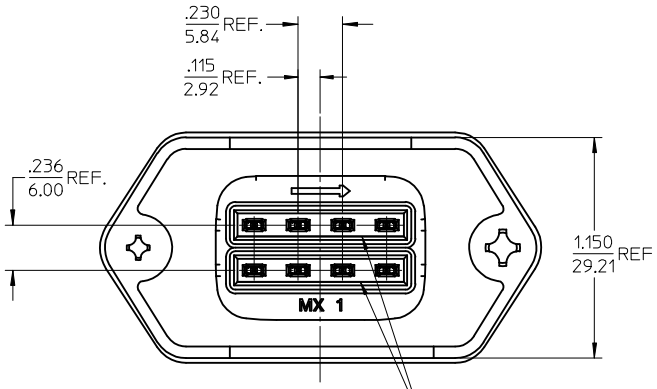


NOTES:

1. MATERIALS:
   HOUSING: POLYESTER (PBT), GLASS FILLED, UL94 V-0,
   COLOR: BLACK
   TERMINALS: COPPER ALLOY
2. TERMINAL FINISHES:
   1. TIN ONLY: 100µIN TIN OVER 50µIN NICKEL
   2. TIN/GOLD: 30µIN SELECT GOLD (CONTACT MATING AREA),
      100µIN SELECT TIN (PCB TAIL AREA) OVER 50µIN NICKEL OVERALL.
3. PRODUCT SPECIFICATION: PS-19428-001.
4. PACKAGING SPECIFICATION: PK-19427-001.
5. MATES WITH: 19418 SERIES RECEPTACLE ASSEMBLIES.
6. RECOMMENDED MOUNTING HARDWARE: (2)#10 X .62/15.8 LONG PLASTIC
   THREAD CUTTING SCREWS. RECOMMENDED TORQUE 15-17 IN-LBS.
   SUGGESTED SOURCE: ITW SHAKEPROOF INDUSTRIAL BOSSCREW OR EQUIVALENT.
7. ELASTOMERIC SILICONE APPLIED IN TERMINAL WELLS. SEE CHART.
8. ASSEMBLY IS ROHS COMPLIANT.

| REV | DESCRIPTION | |
|---|---|---|
| C | ADD 194280046 & 194280047 | 2012/12/07 |
| | EC NO: IPG2013-0868 | |
| | DRWN:WLEUNG | 2012/12/07 |
| | CHKD:DTITUS | 2012/12/07 |
| | APPR:DTITUS | 2013/01/10 |

QUALITY SYMBOLS
▼=0
▽=0

| GENERAL TOLERANCES (UNLESS SPECIFIED) | mm | INCH |
|---|---|---|
| 4 PLACES | ± --- | ± --- |
| 3 PLACES | ± --- | ± .015 |
| 2 PLACES | ± 0.38 | ± --- |
| 1 PLACE | ± --- | ± --- |
| ANGULAR ± 1 ° | | |

DRAFT WHERE APPLICABLE MUST REMAIN WITHIN DIMENSIONS

| DIMENSION STYLE | SCALE | DESIGN UNITS | |
|---|---|---|---|
| IN/MM | 2:1 | INCH | THIRD ANGLE PROJECTION |

| DRAWN BY | DATE |
|---|---|
| DMYRICK | 04/07/02 |
| CHECKED BY | DATE |
| JPAWLICK | 04/07/02 |
| APPROVED BY | DATE |
| RDEROSS | 04/07/02 |

TITLE: 8-WAY STRAIGHT HEADER ASSEMBLY, LONG VERSION

molex MOLEX INCORPORATED

MATERIAL NO.: SEE CHART
DOCUMENT NO.: SD-19428-013
SHEET NO.: 1 OF 1
SIZE: C

THIS DRAWING CONTAINS INFORMATION THAT IS PROPRIETARY TO MOLEX INCORPORATED AND SHOULD NOT BE USED WITHOUT WRITTEN PERMISSION