THIS DRAWING IS UNPUBLISHED. RELEASED FOR PUBLICATION 20
© COPYRIGHT 20 BY TYCO ELECTRONICS CORPORATION, ALL RIGHTS RESERVED.

LOC	DIST
GP	00

REVISIONS

P	LTR	DESCRIPTION	DATE	DWN	APVD
	D	REV PER ECO-09-007182	02JUN2009	MS	MS

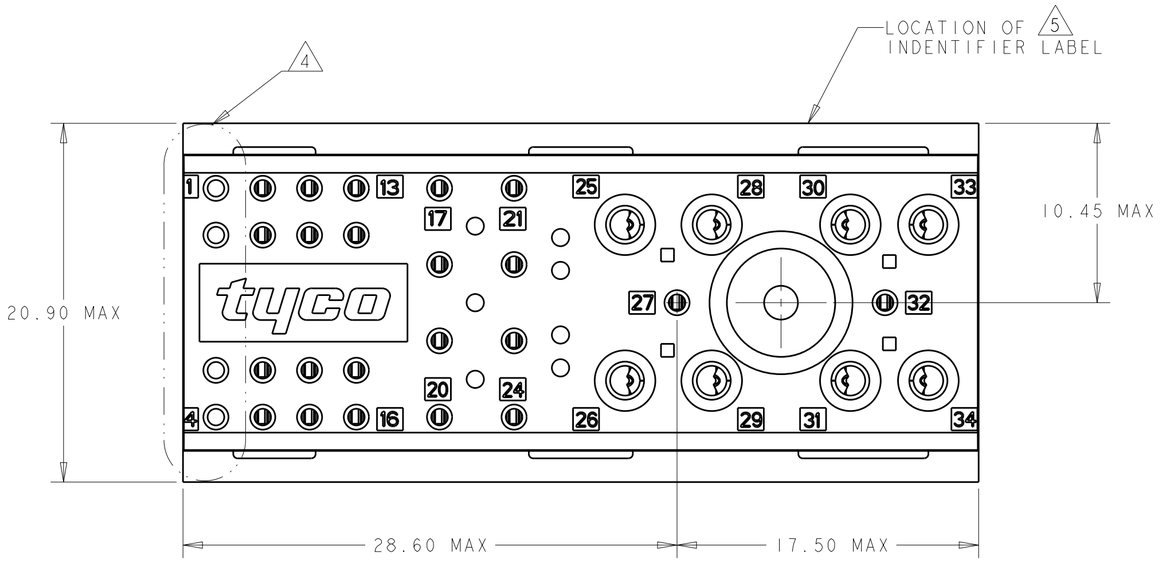

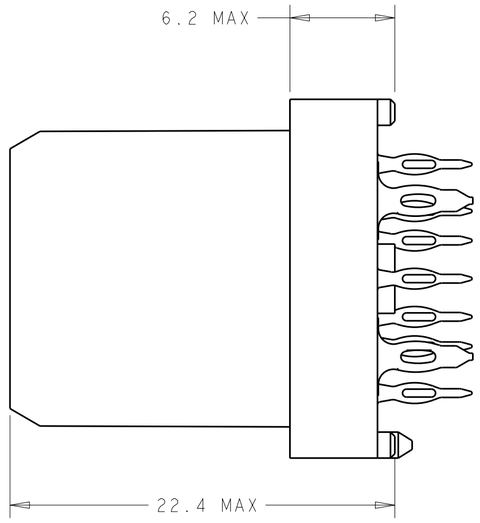

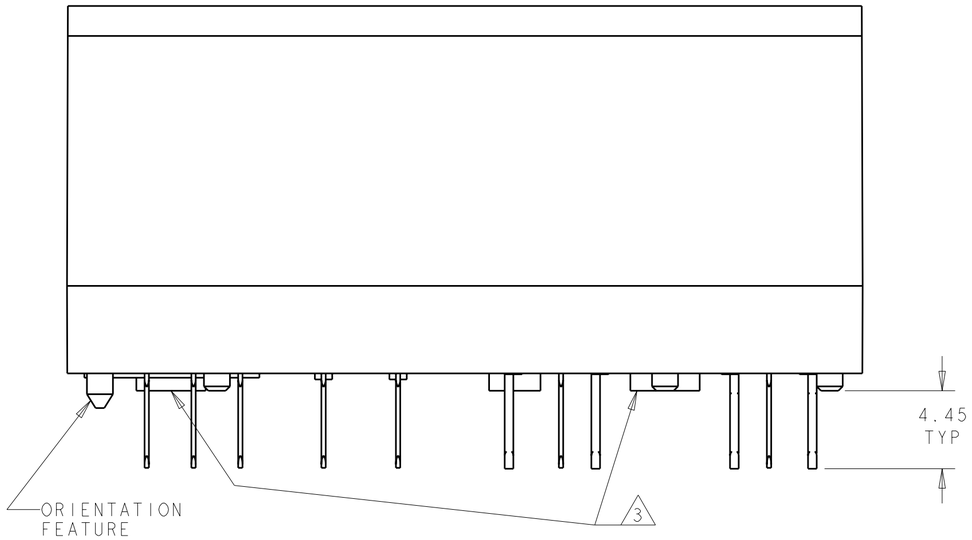

11	10 9	1766501-4
11	10 2	1766501-3
	10 9	1766501-2
	10 2	1766501-1
	FINISH	PART NO

THIS DRAWING IS A CONTROLLED DOCUMENT FOR TYCO ELECTRONICS CORPORATION. IT IS SUBJECT TO CHANGE AND THE CONTROLLING ENGINEERING ORGANIZATION SHOULD BE CONTACTED FOR THE LATEST REVISION.

DIMENSIONS: mm

TOLERANCES UNLESS OTHERWISE SPECIFIED:

0 PLC	±-
1 PLC	±-
2 PLC	±0.50
3 PLC	±0.250
4 PLC	±-
ANGLES	±-

MATERIAL 1 -

FINISH 2 9 -

DWN 03JUN2005 L.SIPE
CHK 03JUN2005 J.McCLELLAN
APVD 03JUN2005 -
PRODUCT SPEC 108-2216
APPLICATION SPEC 114-13156
WEIGHT -

tyco Electronics
Tyco Electronics
Harrisburg, PA 17105-3608

NAME
CONNECTOR ASSEMBLY, VERTICAL, BACKPLANE, COMPLIANT PRESS FIT, ADVANCED TCA

SIZE	CAGE CODE	DRAWING NO	RESTRICTED TO
A2	00779	C-1766501	-

CUSTOMER DRAWING | SCALE 1:1 | SHEET 1 OF 2 | REV D

AMP 1471-9 REV 31MAR2000

Pro/ENGINEER DRAWING

THIS DRAWING IS UNPUBLISHED. RELEASED FOR PUBLICATION 20
© COPYRIGHT 20 BY TYCO ELECTRONICS CORPORATION, ALL RIGHTS RESERVED.

LOC	DIST
GP	00

REVISIONS

P	LTR	DESCRIPTION	DATE	DWN	APVD
	-	SEE SHEET 1	-	-	-

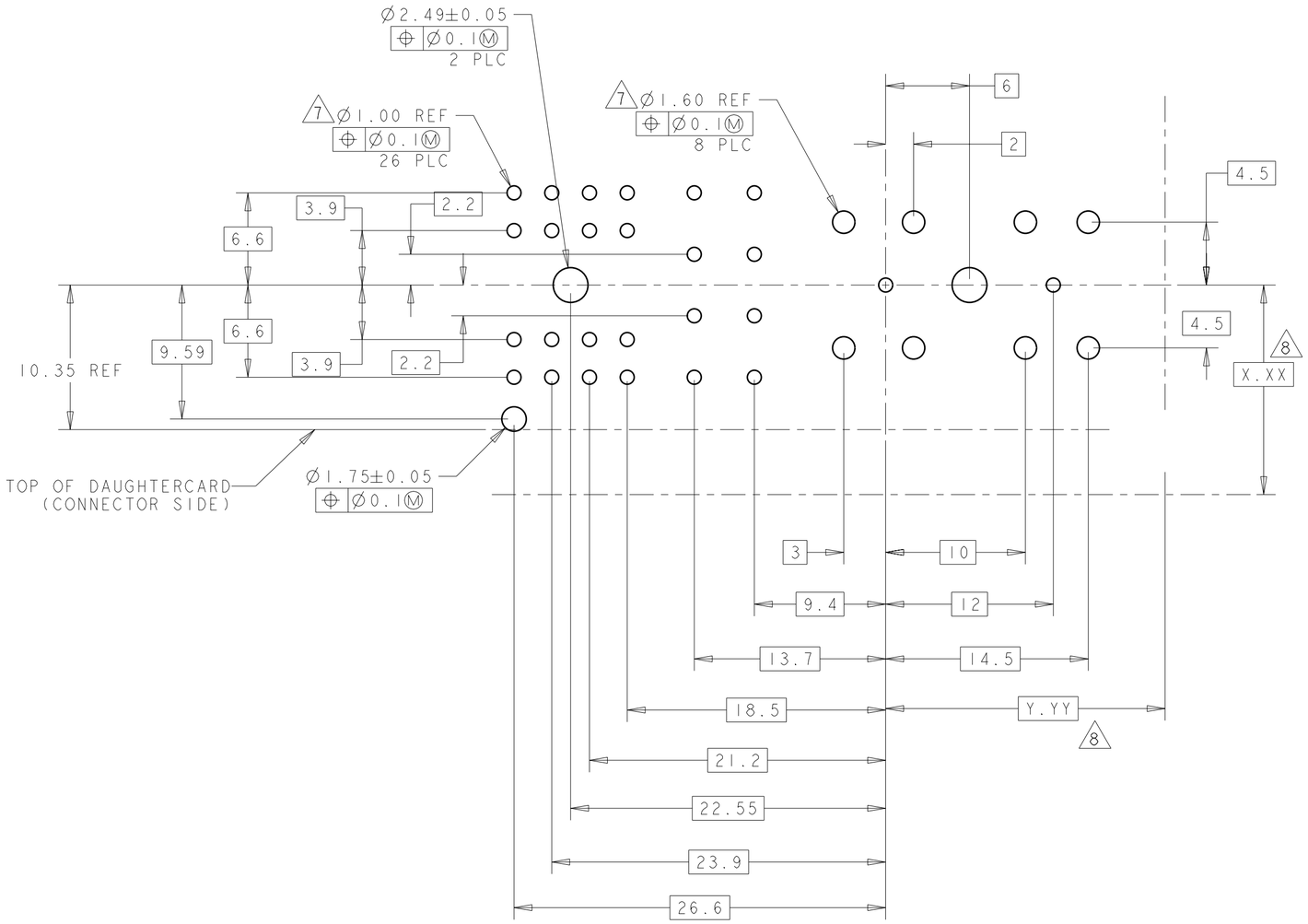

PCB LAYOUT
VIEWED FROM CONNECTOR SIDE
SCALE 7:2

1. MATERIALS:
   INSULATORS: THERMOPLASTIC, GLASS REINFORCED, COLOR-GRAY, UL94V-O FLAMMABILITY RATED.
   SIGNAL PINS:COPPER ALLOY.
   POWER CONTACTS: HIGH CONDUCTIVITY COPPER ALLOY.

2. FINISHES:
   CONTACTS MATING ZONE: GOLD PLATE, 0.76µm MIN THK OVER NICKEL 1.27µm MIN THK.
   SOLDER TAILS: TIN PLATED, 1.27µm MIN THK. OVER NICKEL 1.27µm MIN THK.

3. OPTIONAL MOUNTING SCREWS (Ø2.0mm x 5.0mm DP) FOR USE WITH SELF TAPPING SCREWS (CUSTOMER SUPPLIED).

4. POSITIONS 1-4 NOT POPULATED AND RESERVED FOR FUTURE USE.

5. ITEMS PROVIDED TO THIS SPECIFICATION TO BE PERMANENTLY INDENTIFIED PER THE FOLLOWING IDENTIFIER LABEL:

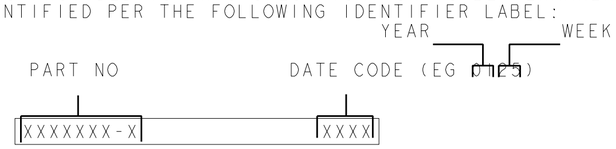

6. GENERAL INFORMATION:

TYCO PART NO	SIZE NO	CONTACT QTY	MATING PIN DIA
1766501-1	16 22	8 22	Ø1.60 Ø0.76

7. MANUFACTURING TOLERANCE FOR:
   Ø1.60 +0.09 -0.06 FINISHED HOLE WITH Sn PLATING:
   DRILLED HOLE = Ø1.75±0.025
   COPPER PLATING = 0.025 MIN
   Sn PLATING = 0.008 MIN
   Ø1.00 +0.09 -0.06 FINISHED HOLE WITH Sn PLATING:
   DRILLED HOLE = Ø1.15±0.025
   COPPER PLATING = 0.025 MIN
   Sn PLATING = 0.008 MIN

8. DATUMS AND BASIC DIMENSIONS TO BE ESTABLISHED BY CUSTOMER.

9. FINISHES:
   CONTACTS MATING ZONE: GOLD PLATE, 0.76µm MIN THK OVER NICKEL 1.27µm MIN THK.
   SOLDER TAILS: TIN-LEAD PLATED, 1.27µm MIN THK. OVER NICKEL 1.27µm MIN THK.

10. CONTACT AREA LUBRICATED WITH BELLCORE APPROVED LUBRICANT. TECHNICAL REFERANCE: GR-1217-COR, ISSUE1, NOVEMBER 1995

11. PRELIMINARY PART NUMBERS NOT RELEASED FOR PRODUCTION

THIS DRAWING IS A CONTROLLED DOCUMENT FOR TYCO ELECTRONICS CORPORATION. IT IS SUBJECT TO CHANGE AND THE CONTROLLING ENGINEERING ORGANIZATION SHOULD BE CONTACTED FOR THE LATEST REVISION.

DIMENSIONS: mm

TOLERANCES UNLESS OTHERWISE SPECIFIED:

0 PLC	±-
1 PLC	±-
2 PLC	±0.50
3 PLC	±0.250
4 PLC	±-
ANGLES	±-

MATERIAL -
FINISH -

DWN	L.SIPE	03JUN2005
CHK	J.McCLELLAN	03JUN2005
APVD	-	03JUN2005
PRODUCT SPEC	108-2216	
APPLICATION SPEC	114-13156	
WEIGHT	-	

tyco Electronics
Tyco Electronics
Harrisburg, PA 17105-3608

NAME: CONNECTOR ASSEMBLY, VERTICAL, BACKPLANE, COMPLIANT PRESS FIT, ADVANCED TCA

SIZE	CAGE CODE	DRAWING NO	RESTRICTED TO
A2	00779	C-1766501	-

CUSTOMER DRAWING | SCALE 1:1 | SHEET 2 OF 2 | REV D