SYMBOL DEFINITION		MISSING SYMBOLS
A DIMENSION WITHOUT AN INSPECTION REPORT SYMBOL (▲) DOES NOT REQUIRE INSPECTION. IT MAY BE CONTROLLED ON THE INDIVIDUAL COMPONENT DRAWING.	TOTAL NO OF INSPECTIONS REQUIRED 93	13
	LAST NO. USED 23	

DWG STATUS					REVISION HISTORY	AUTH	DR	APVD/PDT
DATE	STS	REV	N/P	CHG				
05JAN02	R	00	-	-	ALL PARTS - RELEASED	207183	RAFFAUT	RD
14NOV02	R	02	-	-	ALL PARTS - REVISED	230820	ERFORD	RD

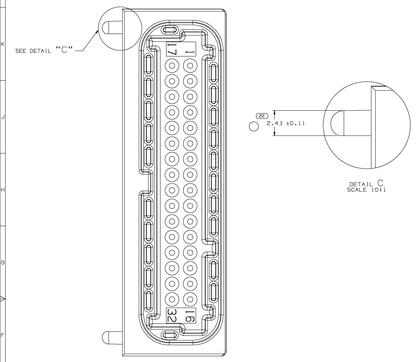

OPTIONAL CONSTRUCTION

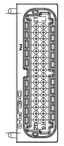

TYPE 102
SAME AS TYPE 101
EXCEPT AS SHOWN
SCALE 2:1

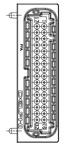

TYPE 103
SAME AS TYPE 101
EXCEPT AS SHOWN
SCALE 2:1

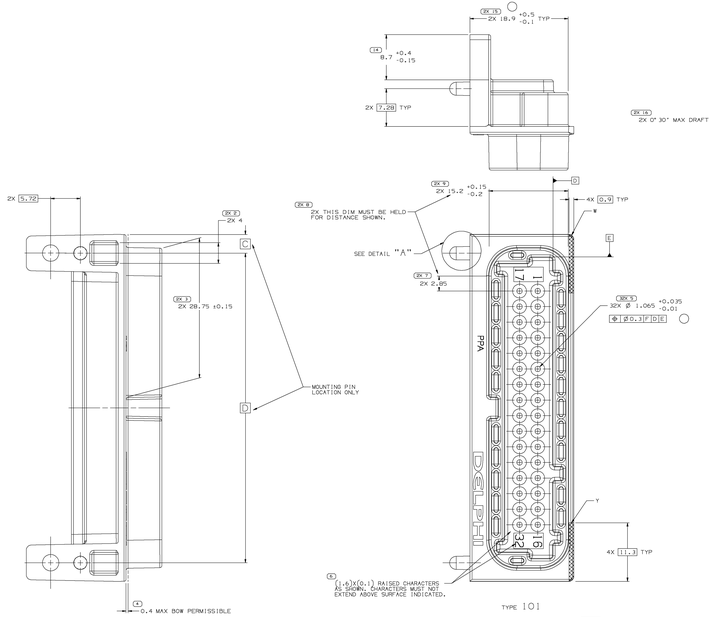

TYPE 101

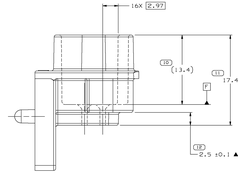

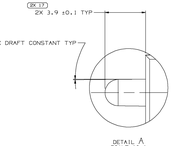

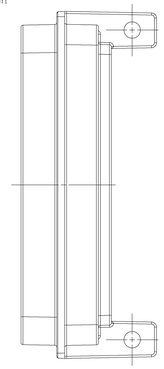

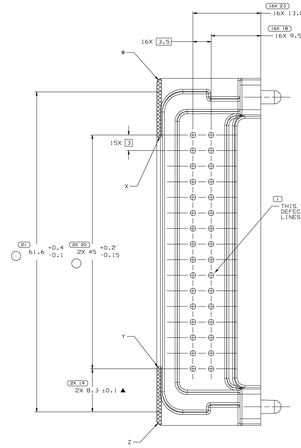

NOTES

1. UNLESS OTHERWISE SPECIFIED AND/OR INDICATED:
   DIMENSIONS ARE TO FACE OF VIEW SHOWN AND
   NOT INCLUDING PLATING. COMPUTER FIRST INSPECTION
   USE MATH MODEL FOR PRECISE TOOL DESIGN OF ALL
   OTHER DIMENSIONS NOT SHOWN BUT REQUIRED FOR TOOL
   BUILD, SEE MATH MODEL FOR PRECISE TOOL PATH DATA.

2. MATERIAL RECYCLING CODE >PPA< PER SAE J1344: (2.3)X(0.1) RAISED CHARACTERS AS SHOWN TO BE LOCATED ON ANY EXTERIOR SURFACE. OPTIONAL CONSTRUCTION TO BE NO MATERIAL RECYCLING CODE.

3. SEALING CODE 3 - DESIGN WILL PASS SALT FOG AND IMMERSION
   TEST AFTER CONDITIONING AS SPECIFIED IN
   ESA-644 (WEATHER-PACK),ESA-710 (METRI-PACK),
   ESA-650 (UNDERHOOD MICRO-PACK),LC-4006
   (MICRO-PACK)WHEN MATED TO A MATED TO
   MATING PART OR EQUIVALENT

4. THIS PART IS CONTROLLED FOR AUTOMATIC FEEDING AS DENOTED ON DRAWING WITH ▲.

5. THIS PART ACCEPTS THE FOLLOWING COMPONENTS OR EQUIVALENT:
   CAVITIES 1 THRU 16 TO ACCEPT TERMINAL 12124059
   CAVITIES 17 THRU 32 TO ACCEPT TERMINAL 12124059
   CAST SEALING SHROUD - SEE HEADER ASSEMBLY DRAWING

6. (2.3)X(0.1) RAISED DELPHI CORPORATE BRAND TO BE LOCATED ON ANY EXTERIOR SURFACE, PREFERABLY VISIBLE AT FINAL ASSEMBLY. OPTIONAL CONSTRUCTION TO BE "PED" OR NO LOGO.

7. GATE LOCATION TO BE DETERMINED BY PED IN CONSULTATION WITH MANUFACTURER.

PART NO	REV	N/P	STATUS	MATERIAL SPECIFICATION AND COLOR	TYPE	L	W	H	VOLUME CM³	ASSEMBLY OR EQUIVALENT	MATING PART RETAINERT
15441914	01	AA		RO1002D9 PPA (GF-M) BLK	103	9.59	5.64	5.6	8.015	15441918	12129022
15441913	01	AA		RO1002B8 PPA (GF-M) BRA	102	26.45	22.5	3.6	53.6	8.055	15441917 12129023
15441912	01	AA		RO1002C7 PPA (GF-M) BLU	101	39.1	39.15	3.6	95.6	8.056	15441916 12129023

DRAWING NUMBER						
15441911						
SIZE	SCALE	FRAME NO	SHEET NO	OF	REV	N/P
A1x4	5:1	0 OF 2	1	OF 2	01	00

| CONTOUR | R 0.5 MAX (CONTOURING RADIUS ONLY) | | | | | |