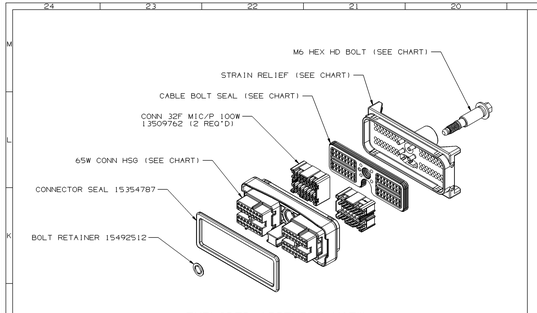

EXPLODED ASSEMBLY VIEW
SCALE [1]

SYMBOL DEFINITION		
A DIMENSION WITHOUT AN INSPECTION REPORT SYMBOL DOES NOT REQUIRE INSPECTION. IT MAY BE CONTROLLED ON THE INDIVIDUAL COMPONENT DRAWING.	TOTAL NO OF INSPECTIONS REQUIRED	13
	LAST NO. USED	13

MISSING SYMBOLS
NO MISSING SYMBOL NUMBER

DWG STATUS					ZONE	REVISION HISTORY	AUTH	DR	APVD 1	APVD 2	APVD 3
DATE	STG	REV	N/P	CHG							
18MY04	R	01	-	-		WAS PE117695 - RELEASED	251997	RH	RH	KRO	
09SE04	-	02	-	-		ALL PARTS - UPDATED ASSEMBLIES TO CORRECT CONNECTOR AND COLOR; INNER CONNECTOR WAS 15401560; ADDED NOTE #10	257463	AK	AK	KRO	M
16MY05	R	03	-	-		ALL PARTS - BOLT RETAINER WAS 12004737 AND REVISED NOTE #7	268066	CCV	FRO	KRO	

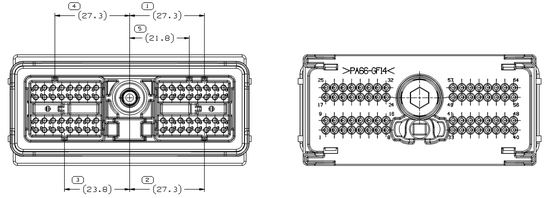

TYPE 102
SAME AS TYPE 101
EXCEPT AS SHOWN

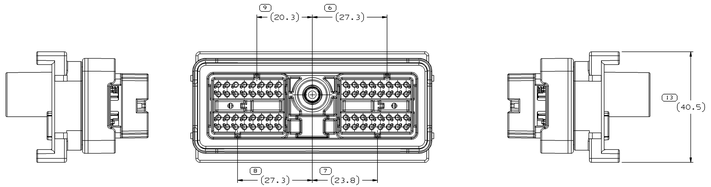

TYPE 101

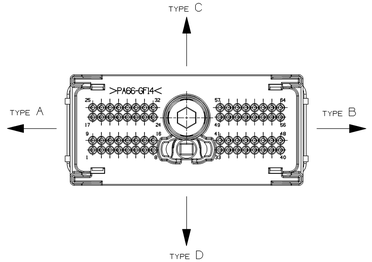

WIRE DRESS DEFINITION

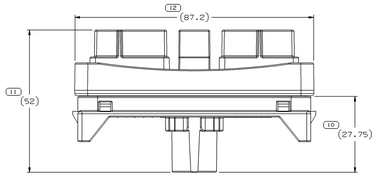

NOTES

1. UNLESS OTHERWISE SPECIFIED AND/OR INDICATED:
   DIMENSIONS ARE TO FACE OF VIEW SHOWN AND AUTOMATICALLY ROUNDED BY COMPUTER FOR INSPECTION (SEE MATH MODEL FOR PRECISE DIMENSIONS). FOR ALL OTHER DIMENSIONS NOT SHOWN BUT REQUIRED FOR TOOL BUILD, SEE MATH MODEL FOR PRECISE TOOL PATH DATA.
2. SEALING CODE 3 - DESIGN WILL PASS SALT FOG AND IMMERSION TEST AFTER CONDITIONING AS SPECIFIED IN ESA-644 (WEATHER-PACK),ESA-710 (METRI-PACK), ESA-650 (UNDERHOOD MICRO-PACK), C-4006 (WORLD CONNECTOR), ETC WHEN MATED TO MATING PART OR EQUIVALENT
3. THIS PART IS NOT CONTROLLED FOR AUTOMATIC FEEDING.
4. REFERENCE MATING COMPONENTS OR EQUIVALENT:
   SEE PE119328 MATING CONFIGURATION REQUIREMENTS DRAWING
   MATING HEADER ASSEMBLY - 15463914
5. THIS PART ACCEPTS THE FOLLOWING HARNESS COMPONENTS OR EQUIVALENT:
   WIRE DRESS COVER - SEE CHART
   SECONDARY TERMINAL LOCK MIC/P 100W - 15404650 (2 REQ'D)
   100W CAVITY PLUG - 12129557
6. CAVITIES ACCEPT THE FOLLOWING TERMINALS OR EQUIVALENT:
   CAVITIES 1-64 MIC/P 100W TO ACCEPT 18 GAUGE 15359002 OR EQUIVALENT
   20,22 GAUGE 15359001 OR EQUIVALENT
7. USE M7 (7MM) HEX-HEAD DRIVE SOCKET

   MAX BOLT TORQUE 6 N·m.
   MIN BOLT TORQUE 4 N·m.
8. CONNECTOR SEAL MUST SIT FLUSH WITH INSIDE FACE OF CONNECTOR. CONNECTOR SEAL MUST NOT BE ROLLED OR TWISTED.
9. FOR OPEN SEAL CAVITIES, SEE CHART.
10. ALL CAVITIES ACCEPT A MAX. INSULATION CRIMP OF 2.3 HIGH AND 2.3 WIDE (2.42 MAX CABLE O.D.) REFER TO ES-A-605 FOR CRIMP DIMENSIONS.

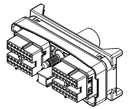

PART NO	STG	REV	N/P	STATUS	TYPE	DESCRIPTION	OPEN CABLE SEAL CAVITIES	CONN HSG PART NUMBER	CONN HSG COLOR	CABLE SEAL PART NUMBER	CABLE SEAL COLOR	CABLE O.D. RANGE	BOLT P/N	STRAIN RELIEF PART NUMBER	STRAIN RELIEF COLOR	TYP CABLE DRESS TYPE	MATING WIRE DRESS COVER (DRESS TYPE) OR EQUIVALENT
15488666	R	03	-		102	64W CONN ASM	1 THRU 64	15488662	DARK BLUE	15489396	LT BLUE	2.26-2.42	15488665	15488663	GRAY	D OR C	15488664 (DRESS D1/TBD (DRESS C)
15488667	R	03	-		101	64W CONN ASM	1 THRU 64	15488661	GRAY	15489396	LT BLUE	2.26-2.42	15488665	15488663	GRAY	D OR C	15488664 (DRESS D1/TBD (DRESS C)

DRAWING NUMBER
15488666
SIZE A1x3 | SCALE 2:1 | FRAME NO 2 OF 2 | SHEET NO 1 OF 1 | STG R | REV 03 | N/P -

(N/A) PROCESS SENSITIVE DIMENSION

DIMENSIONS ENCLOSED IN ( ) INDICATE REFERENCE DIMENSIONS AND NO TOLERANCE WILL BE ATTACHED.

NOMINAL RANGE (MM)	0 TO 6	>6 TO 30	>30 TO 80	>80 TO 120	>120 TO 200	>200 TO 250	>250 TO 300	>300 TO 400
TOLERANCE	±0.20	±0.25	±0.30	±0.35	±0.40	±0.50	±0.60	±0.80

TOLERANCE UNLESS OTHERWISE SPECIFIED
140±15 ANGLE 1 PLACE DECIMAL ±0.1 HOLE ±1 ±1±2
ANGULAR TOLERANCE ±2°

THIRD ANGLE PROJECTION

DO NOT SCALE
USE MATH DATA

DWG TYPE
PART DRAWING
STYLE
VOLUME (CM³) | SYSTEM CODE

UNLESS OTHERWISE SPECIFIED
THIS DOCUMENT IS IN ACCORDANCE WITH ASME Y14.5M-1994 UNLESS OTHERWISE SPECIFIED. DIMENSIONS AND TOLERANCES HEREON ARE FOR PRODUCT PATTERN OF FEATURES MAY BE SHARED SEPARATELY REGARDLESS OF DATUM REFERENCES.

ALL DIMENSIONS ARE IN MILLIMETERS

REFERENCE

DELPHI
DELPHI PACKARD ELECTRIC SYSTEMS
WARREN, OH

		DATE
DR		
APVD1	ROBERT HURD	18MY04
APVD2	ROBERT HURD	18MY04
APVD3	KARL GRZENA	20MY04
APVD4		
APVD5		

SUBSTANCES OF CONCERN: PVC RECYCLED CONTENT PER DELPHI (DP4900)

MATERIAL
SEE DRAWING

DRAWING NAME
TAXI ASM CONN 64 MIC/P 100W

DRAWING NUMBER
15488666
SIZE A1x3 | SCALE 2:1 | FRAME NO 2 OF 2 | SHEET NO 1 OF 1 | STG R | REV 03 | N/P -

15488666