SYMBOL DEFINITION		MISSING SYMBOLS
A DIMENSION WITHOUT AN INSPECTION REPORT SYMBOL (□) DOES NOT REQUIRE INSPECTION. IT MAY BE CONTROLLED ON THE INDIVIDUAL COMPONENT DRAWING.	TOTAL NO OF INSPECTIONS REQUIRED 84	NO MISSING SYMBOL NUMBER
	LAST NO. USED 27	

DWG STATUS					ZONE	REVISION HISTORY	AUTH	DR	APVD1	APVD2
DATE	STS	REV	N/P	CHG						
31JA05	R	1B	-	-	-	ALL PARTS - CLEARED REV COL AND REDRAWN TO REV 1352147Z, 1352147G & 17516905 - RELEASED	26A071	RTV	JVW	MBR

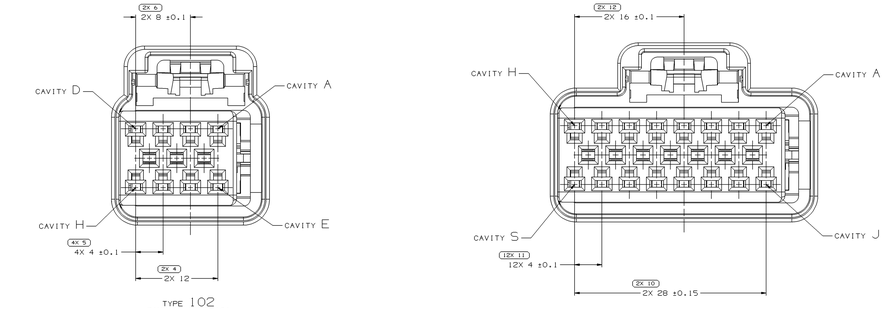

TYPE 102
SAME AS TYPE 101
EXCEPT AS SHOWN

TYPE 105
SAME AS TYPE 101
EXCEPT AS SHOWN

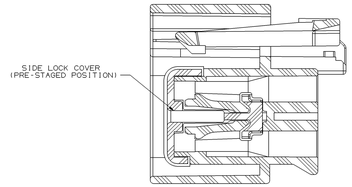

SECTION A-A

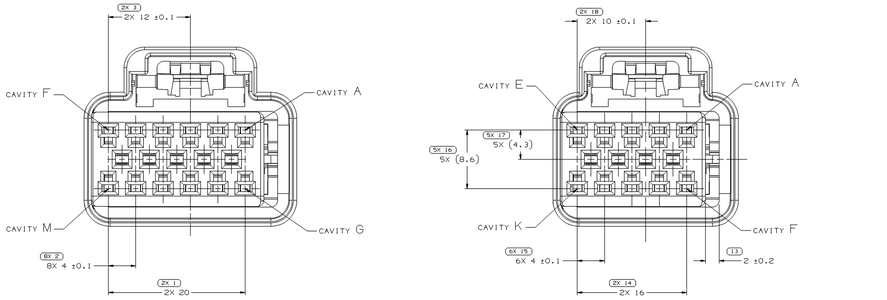

TYPE 103
SAME AS TYPE 101
EXCEPT AS SHOWN

TYPE 101

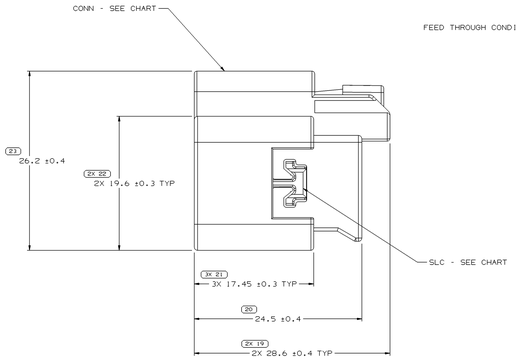

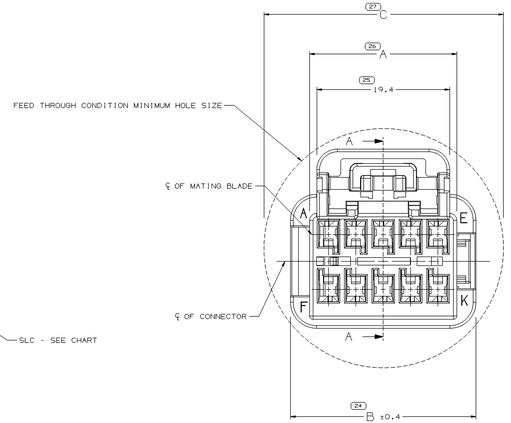

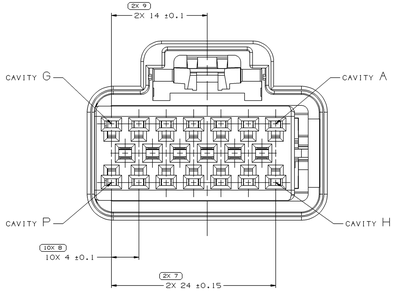

TYPE 104
SAME AS TYPE 101
EXCEPT AS SHOWN

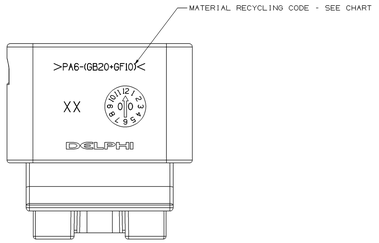

NOTES

1. UNLESS OTHERWISE SPECIFIED AND/OR INDICATED:

   DIMENSIONS ARE TO FACE OF VIEW SHOWN AND AUTOMATICALLY ROUNDED BY COMPUTER FOR INSPECTION (SEE MATH MODEL FOR PRECISE DIMENSIONS). FOR ALL OTHER DIMENSIONS NOT SHOWN BUT REQUIRED FOR TOOL BUILD, SEE MATH MODEL FOR PRECISE TOOL PATH DATA. LIKE CAVITIES ARE IDENTICAL

2. THIS PART ACCEPTS THE FOLLOWING COMPONENTS OR EQUIVALENT:
   CAVITIES ESD00152 TO ACCEPT 12191812 TERMINAL

3. REFERENCE MATING COMPONENTS OR EQUIVALENT:
   TAXI CONN M GT 150 15326984

4. FOR MATING CONFIGURATION REQUIREMENTS SEE 15336382.

5. SEALING CODE O - UNSEALED

6. DO NOT USE I, O, Q & U AS CAVITY LETTERS

PART NO	REV	N/P	DATE	STATUS	TYPE	CONNECTOR	CAVITIES	MATERIAL RECYCLING CODE	SLC	A	B	C	MATING ASM CONNECTOR
13516905	01	-	28JA05	-	105	13516904	16	PBT-200F	15332180/1D405536	33.5 ±0.4	39.1	43	13516907
1352147G	01	-	28JA05	-	102	1352147J	14	PBT-200F	15332172/1D405529	29.5 ±0.4	35.1	39	1352147B
1352147Z	01	-	28JA05	-	102	1352147J	8	PBT-200F	15332148/1D405513	17.5 ±0.3	23.1	33	1352147A
15332177/1D405537	04	AA	-	-	105	15332176/1D405535	16	PA6-GB20 GF10	15332180/1D405536	33.5 ±0.4	39.1	43	15332182/1D405541
15332169/1D405530	04	AA	-	-	104	15332168/1D405528	14	PA6-GB20 GF10	15332172/1D405529	29.5 ±0.4	35.1	39	15332174/1D405534
15332161/1D405523	04	AA	-	-	103	15332160/1D405520	12	PA6-GB20 GF10	15332164/1D405521	25.5 ±0.4	31.1	36	15332166/1D405527
15459912	01	-	06MY03	-	103	15459921	12	PBT-200F	15332164/1D405521	25.5 ±0.4	31.1	36	15459913
15332145/1D405514	04	AA	-	-	102	15332144/1D405512	8	PA6-GB20 GF10	15332148/1D405513	17.5 ±0.3	23.1	33	15332150/1D405519
15459918	01	-	06MY03	-	101	15459950	10	PBT-200F	15332156/1D405303	21.5 ±0.3	27.1	35	15459917
15332153/1D405304	04	AA	-	-	101	15332152/1D405302	10	PA6-GB20 GF10	15332156/1D405303	21.5 ±0.3	27.1	35	15332158/1D405307

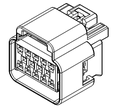

VIEW SCALE DOES NOT
REFLECT ACTUAL PART SIZE

DRAWING NUMBER							
15326980							
SIZE	SCALE	FRAME NO	SHEET NO	STS	REV	N/P	
A1x3	5:1	2 OF 2	1 OF 1	R	1B	-	

(N/A) PROCESS SENSITIVE DIMENSION

DIMENSIONS ENCLOSED IN A □ INDICATE REFERENCE DIMENSIONS AND NO TOLERANCE LIMITS ARE ASSIGNED.

DIMENSIONAL RANGE (MM)	0-6	>6-30	>30-120	>120-400	>400-1000	>1000-2000	>2000-3000	>3000-4000
ITEM	0	>0-20	>20-50	>50-100	>100-150	>150-200	>200-300	>300-400
TOLERANCE UNLESS OTHERWISE SPECIFIED								
±0.15	±0.2	±0.3	±0.4	±0.5	±0.6	±0.8	±1	±1.2

ANGULAR TOLERANCE ±2°

THIRD ANGLE PROJECTION

DO NOT SCALE

USE MATH DATA

DWG TYPE	
PART DRAWING	
STYLE	
VOLUME (CM³)	SYSTEM CODE

UNLESS OTHERWISE SPECIFIED

THIS DOCUMENT IS IN ACCORDANCE WITH ASME Y14.5M-1994 UNLESS OTHERWISE SPECIFIED. ALL DIMENSIONS AND TOLERANCING MEANING ASME. SEPARATE PATTERNS OF FEATURES MAY BE SHARED TEMPORARILY REGARDLESS OF DATUM REFERENCES.

ALL DIMENSIONS ARE IN MILLIMETERS

REFERENCE

DELPHI

DELPHI PACKARD ELECTRIC SYSTEMS
WARREN, OH

		DATE
DR		
APVD1	F. GRUSS	16OCT96
APVD2	R. KOCH	09SE97
APVD3	R. MIS	10SE97
APVD4		
APVD5		

SUBSTANCES OF CONCERN: PVC RECYCLED CONTENT PER DELPHI (DP4900)

MATERIAL
SEE CHART

ALL DIMENSIONS ARE IN MILLIMETERS

DRAWING NAME
TAXI ASM CONN F GT 150

DRAWING NUMBER							
15326980							
SIZE	SCALE	FRAME NO	SHEET NO	STS	REV	N/P	
A1x3	5:1	2 OF 2	1 OF 1	R	1B	-	

15326980