SYMBOL DEFINITION			MISSING SYMBOLS
A DIMENSION WITHOUT AN INSPECTION REPORT SYMBOL (▭) DOES NOT REQUIRE INSPECTION. IT MAY BE CONTROLLED ON THE INDIVIDUAL COMPONENT DRAWING.	TOTAL NO OF INSPECTIONS REQUIRED	8	NO MISSING SYMBOL NUMBER
	LAST NO. USED	8	

DWG STATUS DATE	STS	REV	N/P	DHR	ZONE	REVISION HISTORY	AUTH	DR	APVD 1	APVD 2
02MR05	R	01	-	-	-	WAS PEI25472 AND RELEASED	2b5224	JBD	TKV	MJD
30JN05	R	02	-	-	-	REVISED GRAPHICS & "PART ACCEPTS" NOTE TO SHOW NEW TERMINAL P/N (WAS 12191818)	2b8855	RJD	RJD	MJD
12JN06	R	03	-	-	-	13589761 - RELEASED	281407	RH	RH	MJD
04AU06	R	04	-	-	-	ADDED CPA 15317832 TO NOTE 4 - ADDED NOTES 5 AND 6 REGARDING CPA PERFORMANCE	283041	MM	MM	MJD
22MR07	R	05	-	-	-	13512092 - UPDATED PDM ATTRIBUTES	400922	JBD	JVM	DS1

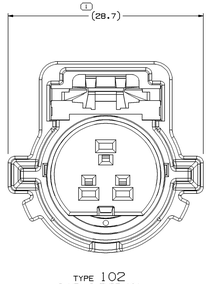

TYPE 102
SAME AS TYPE 101
EXCEPT AS SHOWN

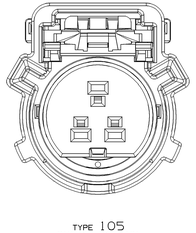

TYPE 105
SAME AS TYPE 101
EXCEPT AS SHOWN

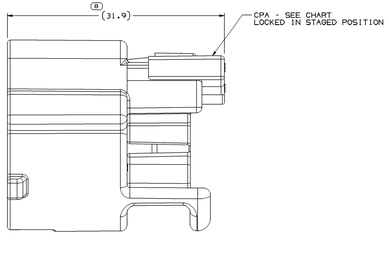

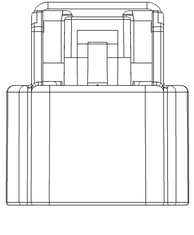

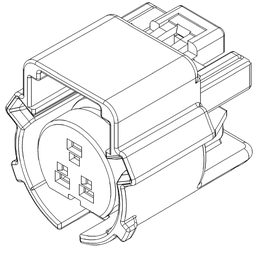

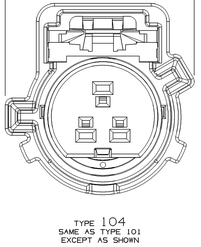

TYPE 104
SAME AS TYPE 101
EXCEPT AS SHOWN

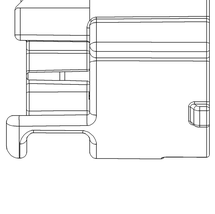

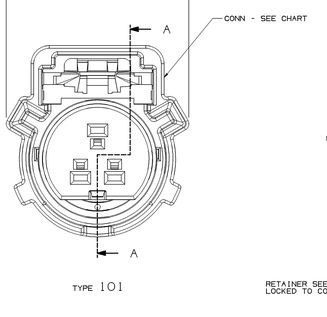

TYPE 101

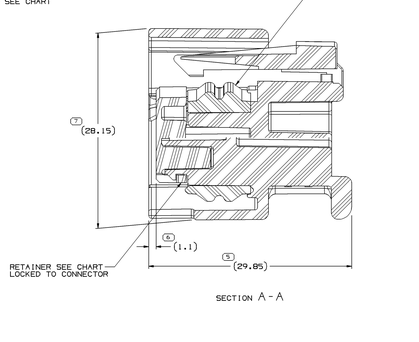

SECTION A-A

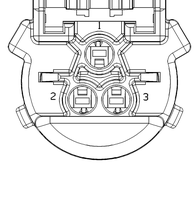

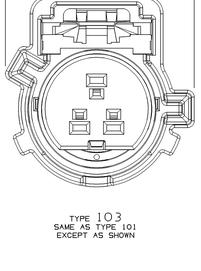

TYPE 103
SAME AS TYPE 101
EXCEPT AS SHOWN

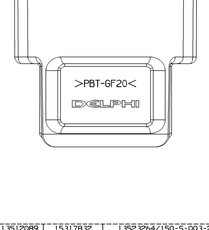

NOTES

1. UNLESS OTHERWISE SPECIFIED AND/OR INDICATED:
   DIMENSIONS ARE TO FACE OF VIEW SHOWN AND AUTOMATICALLY ROUNDED BY COMPUTER FOR INSPECTION (SEE MATH MODEL FOR PRECISE DIMENSIONS). FOR ALL OTHER DIMENSIONS NOT SHOWN BUT REQUIRED FOR TOOL BUILD, SEE MATH MODEL FOR PRECISE TOOL PATH DATA.
2. SEALING CODE 4 - DESIGN WILL MEET REQUIREMENTS OF SAE/USCAR-2 CONNECTOR SYTEM ENVIRONMENTAL TEST FLOWCHART (PRESSURE/VACUUM AND SUBMERSION).
3. REFERENCE MATING COMPONENTS OR EQUIVALENT
   SEE CHART
4. THIS PART ACCEPTS THE FOLLOWING COMPONENTS OR EQUIVALENT:

   TERMINAL 15326264
   SECONDARY TERMINAL LOCK 13512104
   CABLE SEAL 15366021
   CPA 15317832
5. WHEN USING CPA 15317832 CPA ENGAGE FORCE WITH CONNECTOR MATED <50N. (TESTED USING USCAR-2 REV4)
6. WHEN USING CPA 15317832 CPA DISENGAGE FORCE (FULLY SEATED TO PRE STAGE) >10N<50N.(TESTED USING USCAR-2 REV4)

13589761	01	AA	-	105	13512085	13512090	13512089	15317832	15326264/150-S-003-2-A04
13512095	02	AA	-	104	13512088	13512090	13512089	-	15326267/150-S-003-2-D04
13512094	02	AA	-	103	13512087	13512090	13512089	-	15326268/150-S-003-2-C04
13512093	02	AA	-	102	13512086	13512090	13512089	-	15326266/150-S-003-2-B04
13512092	02	AB	-	101	13512085	13512090	13512089	-	15326264/150-S-003-2-A04
PART NO	REV	N/P	STATUS	TYPE	CONN	RETAINER	SEAL	CPA	(MATING PART) EWCAP P/N

DRAWING NUMBER 13512091 | SIZE A1x3 | SCALE 5:1 | TRIAL 2 OF 2 | SHEET 1 OF 1 | REV R | PCN 05 | N/P -

(N/A) PROCESS SENSITIVE DIMENSION

DIMENSIONS ENCLOSED IN () INDICATE REFERENCE DIMENSION, NO AS TOLERANCE LIMITS ARE ESTABLISHED

REFERENCE

| ATMOSPHERICAL ROOM (MM) | | |