| MVL PART NUMBER | REV | DELPHI PART NUMBER | REV | KEY OPTIONS (HOUSING) | COLOR | CLIP SLOT TYPE | HOUSING | MALE RETAINER | SHORTING BAR | NO. OF CIRCUITS PLUGGED | TEST METHOD SEE NOTE #2 | MATING FEMALE CONNECTOR PART NO. REFERENCE MVL | MATING FEMALE CONNECTOR PART NO. REFERENCE DELPHI |
|---|---|---|---|---|---|---|---|---|---|---|---|---|---|
| PP10000678 F254000 | A | 13672210 | 01 | A | BLACK | 1 | PP10000716 | PP10001819 | N/A | 0 | USCAR-2 Rev 5 Class 3 (125°) | PP10000655 PP10000656 | 13767809 13795018 |
| PP10000679 F354000 | A | 33511772 | 01 | B | GRAY | 1 | PP10000717 | | | 0 | | PP10000658 PP10000659 | 33511794 33511795 |
| PP10000680 F454000 | A | 33511774 | 01 | C | BROWN | 1 | PP10000718 | | | 0 | | PP10000660 PP10000661 | 33511796 33511797 |
| PP10000681 F554000 | A | 33511776 | 01 | D | GREEN | 1 | PP10000719 | | | 0 | | PP10000662 PP10000664 | 33511798 33511799 |
| PP10000682 | A | 33511778 | 01 | E | YELLOW | 1 | PP10000720 | | 54251496 | 0 | USCAR-2 Rev 5 Class 1 (85°) | PP10000665 | 33511800 |
| F252000 | A | 33511779 | 01 | F | YELLOW | 1 | PP10001774 | | | 0 | | F322000 | 33511801 |
| F552000 | A | 33511780 | 01 | A | BLACK | 2 | PP10001778 | | N/A | 0 | USCAR-2 Rev 5 Class 3 (125°) | PP10000655 PP10000656 | 13767809 13795018 |
| F652000 | A | 33511781 | 01 | B | GRAY | 2 | PP10001779 | | | 0 | | PP10000658 PP10000659 | 33511794 33511795 |
| F752000 | A | 33511782 | 01 | C | BROWN | 2 | PP10001780 | | | 0 | | PP10000660 PP10000661 | 33511796 33511797 |
| F852000 | A | 33511783 | 01 | D | GREEN | 2 | PP10001781 | | | 0 | | PP10000662 PP10000664 | 33511798 33511799 |
| F952000 | A | 33511784 | 01 | E | YELLOW | 2 | PP10001782 | | 54251496 | 0 | USCAR-2 Rev 5 Class 1 (85°) | PP10000665 | 33511800 |
| F062000 | A | 33511785 | 01 | F | YELLOW | 2 | PP10001783 | | | 0 | | F322000 | 33511801 |
| F462000 | A | 33511786 | 01 | D | BLACK | 0 | PP10001777 | | N/A | 0 | USCAR-2 Rev 5 Class 3 (125°) | F622000 F722000 | 33510808 33510809 |
| F568000 | B | 13780225 | 01 | A | BLACK | 1 | PP10000716 | PP10001818 | N/A | 7 | USCAR-2 Rev 5 Class 3 (125°) | F668000 | 13780226 |
| F485300 | E | 33511787 | 01 | | | | | | | 24 | | | |
| F151800 | A | 33511788 | 01 | A | BLACK | 2 | PP10001778 | | N/A | 6 | | F641800 | 33510810 |
| F251800 | A | 33511789 | 01 | A | BLACK | 2 | PP10001778 | | N/A | 4 | | F741800 | 33510811 |
| F670210 | G | 33511790 | 01 | E | YELLOW | 1 | PP10000720 | PP10001819 | NONE | 0 | USCAR-2 Rev 5 Class 1 (85°) | | |
| F770210 | G | 33511791 | 01 | F | | | PP10001778 | | | 0 | | | |
| F870210 | G | 33511792 | 01 | E | | 2 | PP10001782 | | | 0 | | | |
| F970210 | G | 33511793 | 01 | F | | | PP10001783 | | | 0 | | | |
| N/A | - | 33400887 | 01 | A | BLACK | 1 | PP10000716 | PP10001819 | N/A | 4 | USCAR-2 Rev 5 Class 3 (125°) | | |
| N/A | - | 33400888 | 01 | | | | | | | 18 | | | |
| N/A | - | 33400889 | 01 | | | | | | | 16 | | | |
| N/A | - | 33400890 | 01 | | | | | | | 8 | | | |
| N/A | - | 33400891 | 01 | | | | | | | 9 | | | |
| N/A | - | 33400892 | 01 | | | | | | | 5 | | | |
| N/A | - | 33400893 | 01 | | | | | | | 12 | | | |

PLUGGED (X) SEAL POSITIONS

| DELPHI PART NUMBER | 1 | 2 | 3 | 4 | 5 | 6 | 7 | 8 | 9 | 10 | 11 | 12 | 13 | 14 | 15 | 16 | 17 | 18 | 19 | 20 | 21 | 22 | 23 | 24 |
|---|---|---|---|---|---|---|---|---|---|---|---|---|---|---|---|---|---|---|---|---|---|---|---|---|
| | 2.8 | 2.8 | SB | | SB | | SB | | SB | | 2.8 | 2.8 | 2.8 | 2.8 | SB | | SB | | SB | | SB | | 2.8 | 2.8 |
| 13672210 | | | | | | | | | | | | | | | | | | | | | | | | |
| 33511772 | | | | | | | | | | | | | | | | | | | | | | | | |
| 33511774 | | | | | | | | | | | | | | | | | | | | | | | | |
| 33511776 | | | | | | | | | | | | | | | | | | | | | | | | |
| 33511778 | | | | | SB | | | | | | | | | | | | | | | | | | | |
| 33511779 | | | | | SB | | SB | | | | | | | | | | | | | | | | | |
| 33511780 | | | | | | | | | | | | | | | | | | | | | | | | |
| 33511781 | | | | | | | | | | | | | | | | | | | | | | | | |
| 33511782 | | | | | | | | | | | | | | | | | | | | | | | | |
| 33511783 | | | | | | | | | | | | | | | | | | | | | | | | |
| 33511784 | | | | | SB | | | | | | | | | | | | | | | | | | | |
| 33511785 | | | | | SB | | SB | | | | | | | | | | | | | | | | | |
| 33511786 | | | | | | | | | | | | | | | | | | | | | | | | |
| 13780225 | | | | | | | | X | | X | | | | | X | | X | X | | X | | X | | |
| 33511787 | X | X | X | X | X | X | X | X | X | X | X | X | X | X | X | X | X | X | X | X | X | X | X | X |
| 33511788 | X | X | | | | | | | | | X | X | X | | | | | | | | | | | X |
| 33511789 | X | X | | | | | | | | | X | X | | | | | | | | | | | | |
| 33511790 | | | | | | | | | | | | | | | | | | | | | | | | |
| 33511791 | | | | | | | | | | | | | | | | | | | | | | | | |
| 33511792 | | | | | | | | | | | | | | | | | | | | | | | | |
| 33511793 | | | | | | | | | | | | | | | | | | | | | | | | |
| 33400887 | | | | | | | | | | | X | X | | | | | | | | | | X | | X |
| 33400888 | X | X | | | X | | X | X | X | X | | X | | X | X | X | X | X | X | X | X | X | | X |
| 33400889 | X | X | | | X | | | X | | X | X | X | | X | | X | X | X | X | X | X | X | | X |
| 33400890 | X | X | | | X | | | | | | X | X | | | | | | | | | X | X | | X |
| 33400891 | X | X | | | X | | | | X | | X | X | | | | | | | | | X | X | | X |
| 33400892 | | | | | | | | | X | | X | X | | | | | | | | | | X | | X |
| 33400893 | | | | | | | | X | | X | X | X | | X | | X | X | X | X | X | | X | | X |
| CAVITY NOS FOR REF. | 1 | 2 | 3 | 4 | 5 | 6 | 7 | 8 | 9 | 10 | 11 | 12 | 13 | 14 | 15 | 16 | 17 | 18 | 19 | 20 | 21 | 22 | 23 | 24 |

(Last column of the circuits table at the cavity reference row: NO. OF PLUGS)

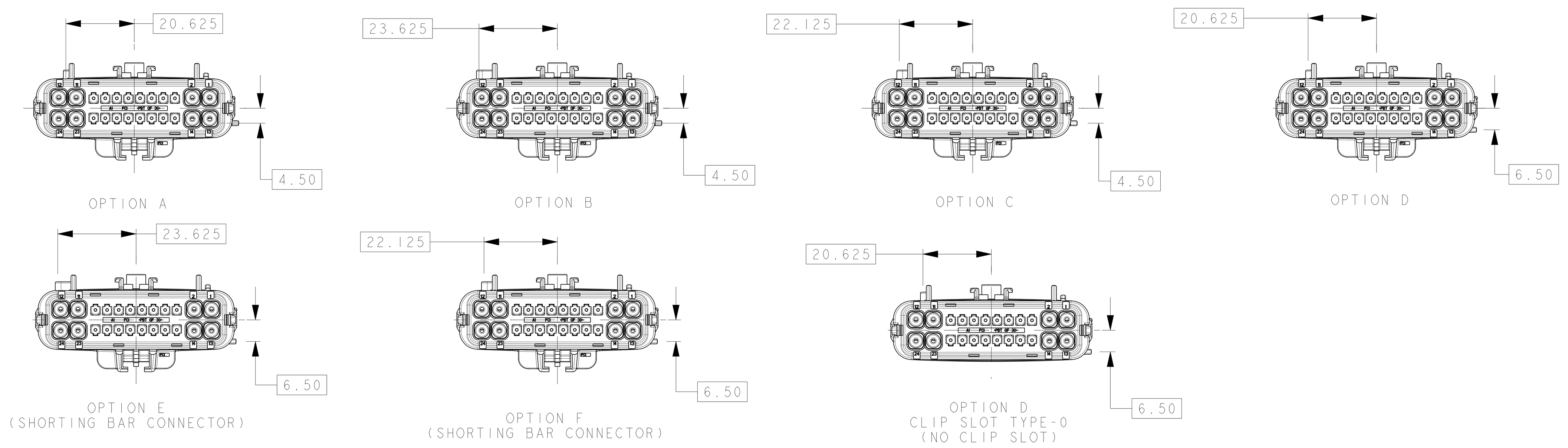


# POLARIZATION OPTIONS

ACTUAL SIZE VIEWS

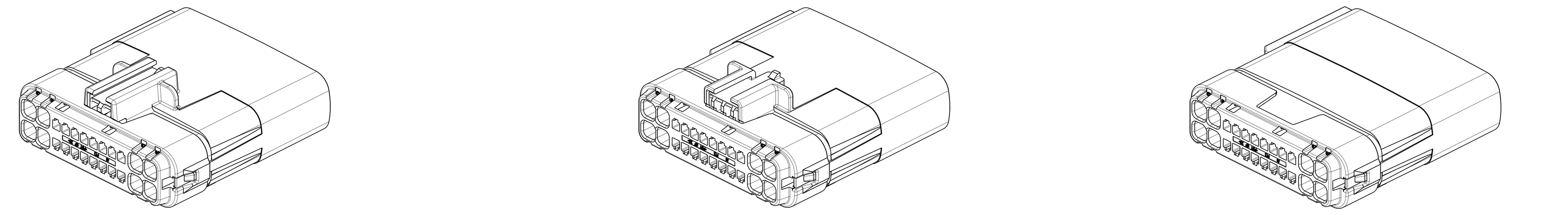

CLIP SLOT TYPE - 1 (USED FOR CHRYSLER)

CLIP SLOT TYPE - 2 (USED FOR FORD)

CLIP SLOT TYPE - 0 (WITHOUT CLIP SLOT)

# ACTUAL SIZE VIEWS SCALE 1:1

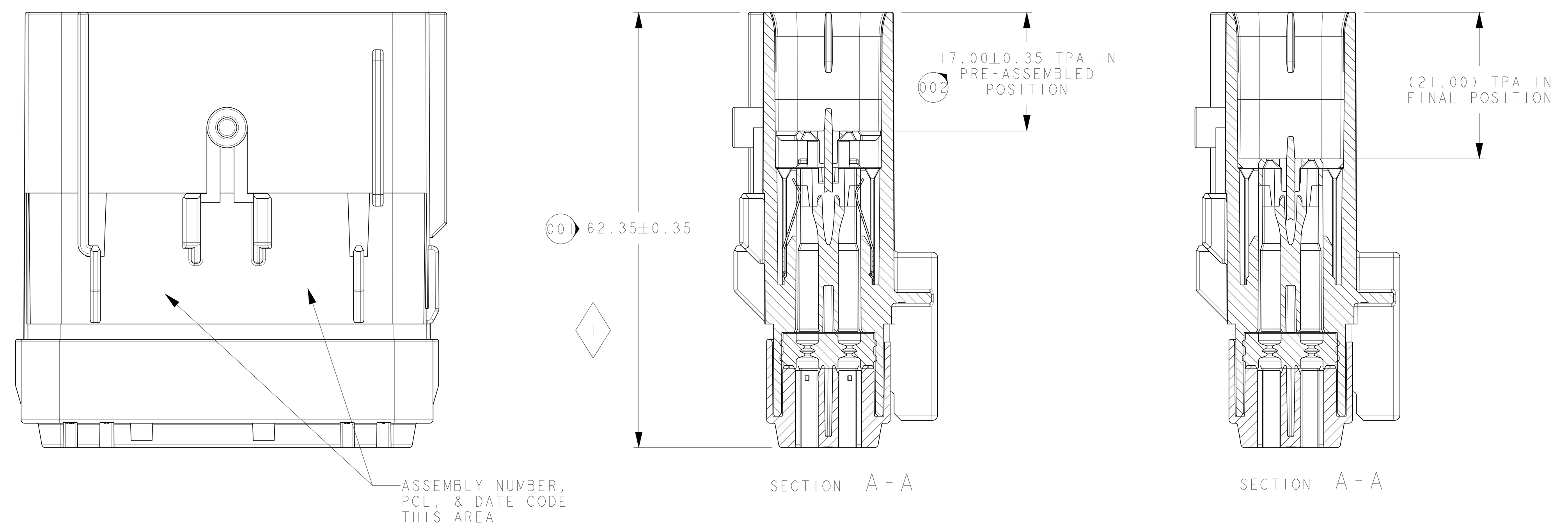


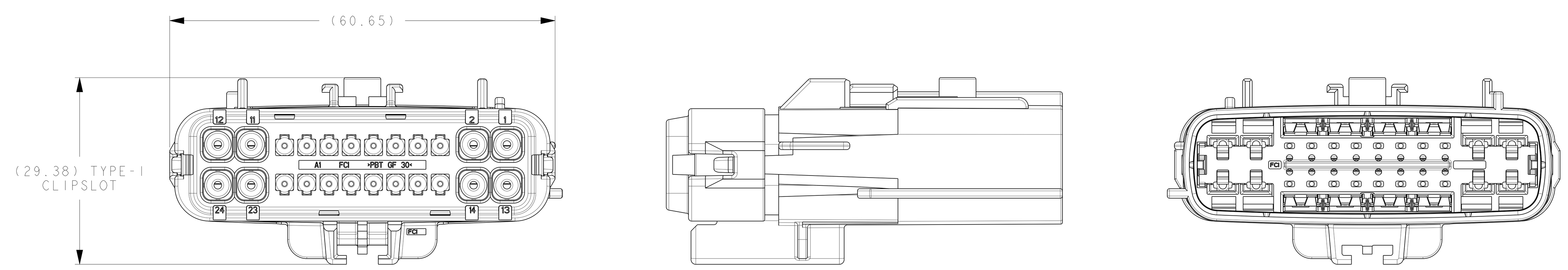


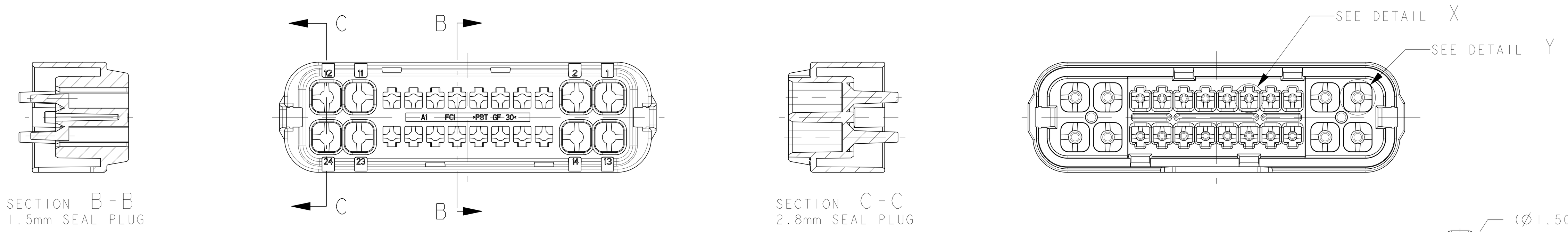


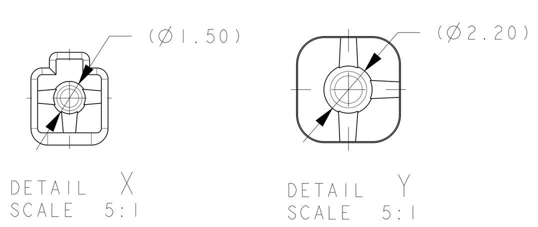


# EXEMPLARY VIEWS: RETAINER WITH PLUGGED 1.5MM & 2.8MM CAVITIES

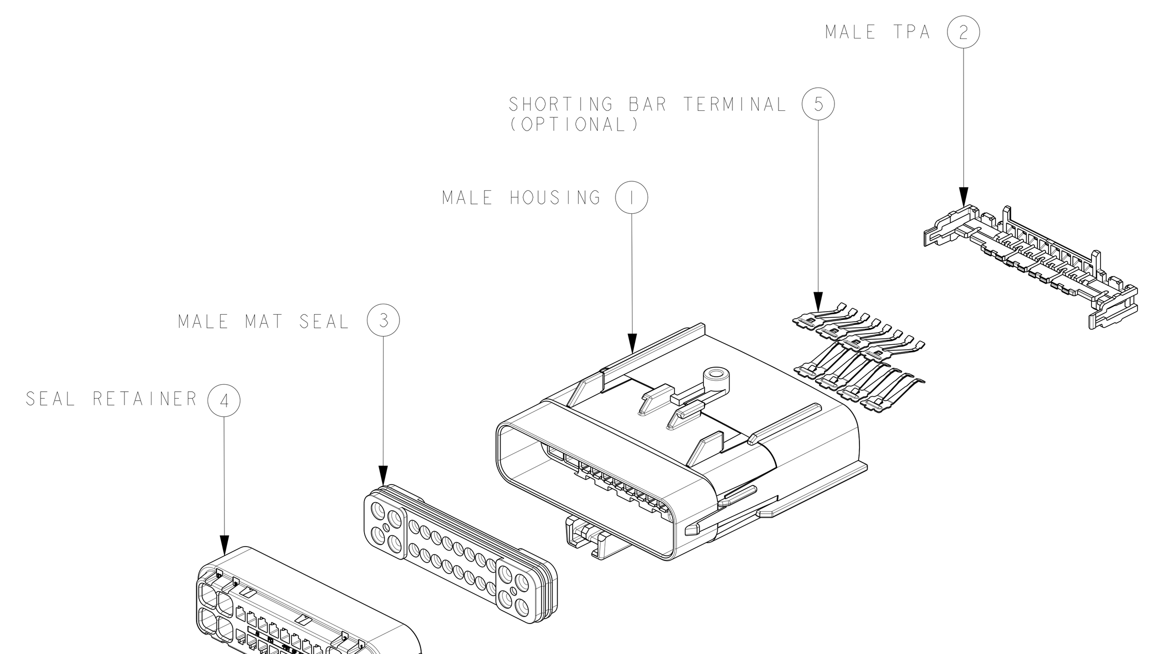


EXPLODED VIEW
SCALE 1:1

| APLICABLE COMPONENTS | | | | | |
|---|---|---|---|---|---|
| SUPPLIER PART NO. | SUPPLIER NAME | DELPHI PART NO. | DESCRIPTION | PLATING/ MATERIAL | GRIP SIZE |
| 54001626 | MVL | 13630404 | APEX 150 TERMINAL | TIN | 16,18 |
| 54002001 | MVL | 13624759 | APEX 150 TERMINAL | TIN | 20,22 |
| 54001628 | MVL | 13795935 | APEX 150 TERMINAL | GOLD | 16,18 |
| 54002003 | MVL | 13851003 | APEX 150 TERMINAL | GOLD | 20,22 |
| 54001629 | MVL | 13755243 | APEX 150 TERMINAL-FOR SHORTING BAR | GOLD | 16,18 |
| 54002004 | MVL | 33500641 | APEX 150 TERMINAL-FOR SHORTING BAR | GOLD | 20,22 |
| 54001001 | MVL | 10762774 | APEX 2.8 TERMINAL | TIN | 12 |
| 54001401 | MVL | 10757692 | APEX 2.8 TERMINAL | TIN | 14,16 |
| 54001801 | MVL | 10762775 | APEX 2.8 TERMINAL | TIN | 18 |
| 54240003 | MVL | 13765188 | APEX 150 2.8mm SEAL PLUG - MALE | PA66 GF35 | |
| 54241629 | MVL | 13613164 | APEX 150 UNIVERSAL SEAL PLUG | PA66 GF35 | |
| 54200010 | MVL | 13768145 | DOUBLE X-MAS TREE CLIP WITH FORWARD STOP | PA66 | FOR CLIP SLOT TYPE-1 |
| 15-002775 | ITW | 15451401 | SINGLE X-MAS TREE CLIP | PA66 | |
| 1437839-1 | TYCO | 10763674 | DOUBLE X-MAS TREE CLIP (UNIVERSAL) | PA66 | |

| COMMON PART NUMBER CHART ONE EACH INCLUDED IN ASSEMBLY | | | |
|---|---|---|---|
| ITEM | MVL P/N | DESCRIPTION | MATERIAL |
| 2 | PP10001728 | TPA | PBT GF30 |
| 3 | PP10001600 | MATT SEAL | SILICONE |

NOTES:

1) MAXIMUM TEMPERATURE CLASS:
SEE CHART

2) CONFORMS TO TEST METHOD AS SHOWN IN CHART

3) CONNECTOR MAY BE USED WITH THE FOLLOWING RANGE OF WIRE SIZES AND/TYPES:
-APEX 150 TERMINALS:
-SIZE: 22 GAGE- 16 GAGE- 1.50mm MIN O.D. TO 2.41mm MAX O.D.
-TYPE: TXL (MIL123-A / MS-8288)
ALTERNATIVELY:
-SIZE: 0.5mm² TO 1.5mm² / 1.40mm MIN O.D. TO 2.40mm MAX O.D.
-TYPE: FLR2X (125°C PE-X) or FLRYW (125°C PVC)
(STRUCTURE & PROPERTIES ACC. ISO6722)
-APEX 2.8 TERMINALS:
-SIZE; 18 GAGE- 12 GAGE- 1.90mm MIN O.D. TO 3.35mm MAX O.D.
-TYPE: TXL (MIL123-A / MS-8288)
ALTERNATIVELY:
-SIZE: 0.75mm² TO 3.0mm² / 1.70mm MIN O.D. TO 3.20mm MAX O.D.
-TYPE: FLR2X (125°C PE-X) or FLRYW (125°C PVC)
(STRUCTURE & PROPERTIES ACC. ISO6722)
-CONTACT MVL ENGINEERING REGARDING USE OF OTHER WIRE SIZES AND/OR TYPES

4) CONNECTOR MAY BE USED WITH THE FOLLOWING TERMINALS:
-MVL APEX150 AND APEX 2.8 WITH WIRE SIZES DEFINED IN NOTE 3. SEE MVL DRAWINGS J54011 AND C15005 FOR SPECIFIC PART NUMBERS AND CRIMPING REQUIREMENTS.
-CONTACT MVL ENGINEERING REGARDING USE OF COMPATIBLE NON MVL TERMINALS

5) ANNUAL QUALITY REQUIREMENTS:
IT IS PERMISSIBLE TO PERFORM CONTINUOUS CONFORMANCE PER MVL SPECIFICATION #AQA-001 INSTEAD OF ANNUAL LAYOUT AND ANNUAL PV REQUIREMENTS OF QS-9000 SECTION 2 AND SAE/USCAR-2 REV 4. FOR TERMINAL TO CONNECTOR AND TPA TO CONNECTOR ONLY.

6) FEMALE CONNECTORS EQUIPPED WITH OPTIONAL CLIPSLOT CAN ONLY BE MATED TO MALE CONNECTORS WITHOUT CLIPSLOT FEATURE. KEY OPTION J IS RESERVED FOR FEMALE CONNECTORS WITH CLIPSLOT FEATURES AND THEIR MALE COUNTERPARTS.
-CONTACT MVL ENGINEERING FOR SPECIFIC PACKAGING REQUIREMENTS WHEN USING THESE CONFIGURATIONS

7) QUALITY ASSURANCE REQUIREMENTS SPC DATA REQUIRED 1

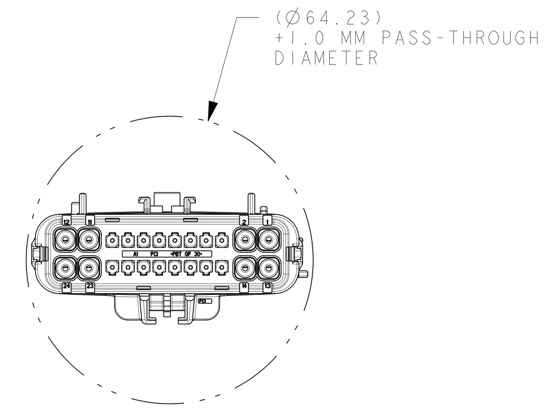


PASS-THROUGH
SCALE 1:1

| ECN-NO. | ZONE | CHANGE DESCRIPTION |
|---|---|---|
| 13-00493 | CHART A15 | ECO 422316 - ADDED NEW P/N'S 33400887 TO 33400993 AND FOR MVL PART NUMBERS. CHART REVISED, COMMON ITEMS REMOVED AND P/N'S ADDED ON COMMON PART NUMBER CHART.COLUMN ADDED FOR NO. OF CIRCUITS PLUGGED. ADDED CIRCUIT NUMBERS ON THE BOTTOM FOR EASE OF REFERENCE |
| ECN-12-01172 | CHART | ADDED F254000 TO PP10000678, F354000 TO PP10000679, F454000 TO PP10000680, F554000 TO PP10000681 |
| 11-00349 | CHART | ADDED PART NUMBERS FOR NON-SHORTING BAR YELLOW CONNECTORS |
| 796/10 | CHART NOTES | ADDED P/N'S AND 18W/20W PINOUTS F151800 & F251800; ALTERNATIVE WIRES (FLR2X & FLRYW) ADDED AT NOTE #3 |
| 10459 | CHART COMP CHART | ADDED ASSEMBLY F485300, 54200010 WAS 56200010 |
| 1 | NOTES | REMOVED EXCEPTIONS FROM TEST METHOD NOTE |
| 10174 | Q5-2 CHART | REMOVED OPTION G AND H- OPTION D (NO CLIP SLOT) WAS J , ADDED NOTE #7 |
| 10050 | CHART | REPLACED RETAINER NUMBER FOR PART NUMBER F568000 |
| 9658 | - | REPLACED FORMAT, DRAWING NUMBER PCC0377514 WAS PC10377514 |
| | CHART | ADDED PART NUMBER F568000, REVISED TEST METHOD |
| | D-15 | ADDED APP COMP CHART |
| | NOTES | REVISED NOTES #1, #2 , #4, AND #6 |
| | - | REVISED DRAWING LAYOUT, REVISED TITLE |
| 9452 | - | DRAWING RELEASED |

COPYRIGHT DELPHI CORPORATION AND/OR ITS AFFILIATES. ALL RIGHTS RESERVED. REVISED THIS DRAWING IS THE PROPERTY OF DELPHI CORPORATION AND CONTAINS DELPHI CONFIDENTIAL INFORMATION. THE REPRODUCTION, DISTRIBUTION AND UTILIZATION OF THIS DOCUMENT OR ITS RELATED CAD MATH DATA, AS WELL AS COMMUNICATION OF ANY CONTENT TO OTHERS, WITHOUT EXPRESS AUTHORIZATION, IS PROHIBITED.


PRODUCT SPEC.: APEX 150 | PACKAGING SPEC.: - | APPLICATION SPEC.: -
TOLERANCES ±0.1 ±2° | MATERIAL: SEE CHART | SURFACE FINISH: -
COUNTERPART Nr.: PCC0377483 | COLOUR: SEE CHART
DO NOT MEASURE DRAWING | TOOL NO. - | ECO Loc. Code AN
DELPHI — DELPHI PACKARD ELECTRICAL/ELECTRONIC ARCHITECTURE NOVI, MI
3RD ANGLE | DIMENSION IN MILLIMETERS | CAD SYSTEM pro / eng. | DWG SIZE A0

| | DATE | NAME |
|---|---|---|
| CREATED BY | 2006/10/25 | Frank HOLUB |
| MODIFIED BY | 2013/04/26 | Sucha SIAN |
| CHECKED BY | 2013/04/29 | Matt MAJOR |
| APPROVED BY | 2013/04/29 | Bob CUE |

TITLE: 24-WAY MALE ASSEMBLY
PROJECT: 24-WAY HYBRID SEALED
ESR NO. AM-50171 | CAT. NO. -
FILE NAME PCC0377514
DOCUMENT UNDER PDS CONTROL NO MODIFICATION ALLOWED OUTSIDE
DRAWING NUMBER PCC0377514 REV. K
STATE SERIAL RELEASED
PART NUMBER See Table REV. -
APPROVAL LEVEL - | SHEET 1 of 1 | SCALE 2:1