DO NOT SCALE

PART NO 1530 4847

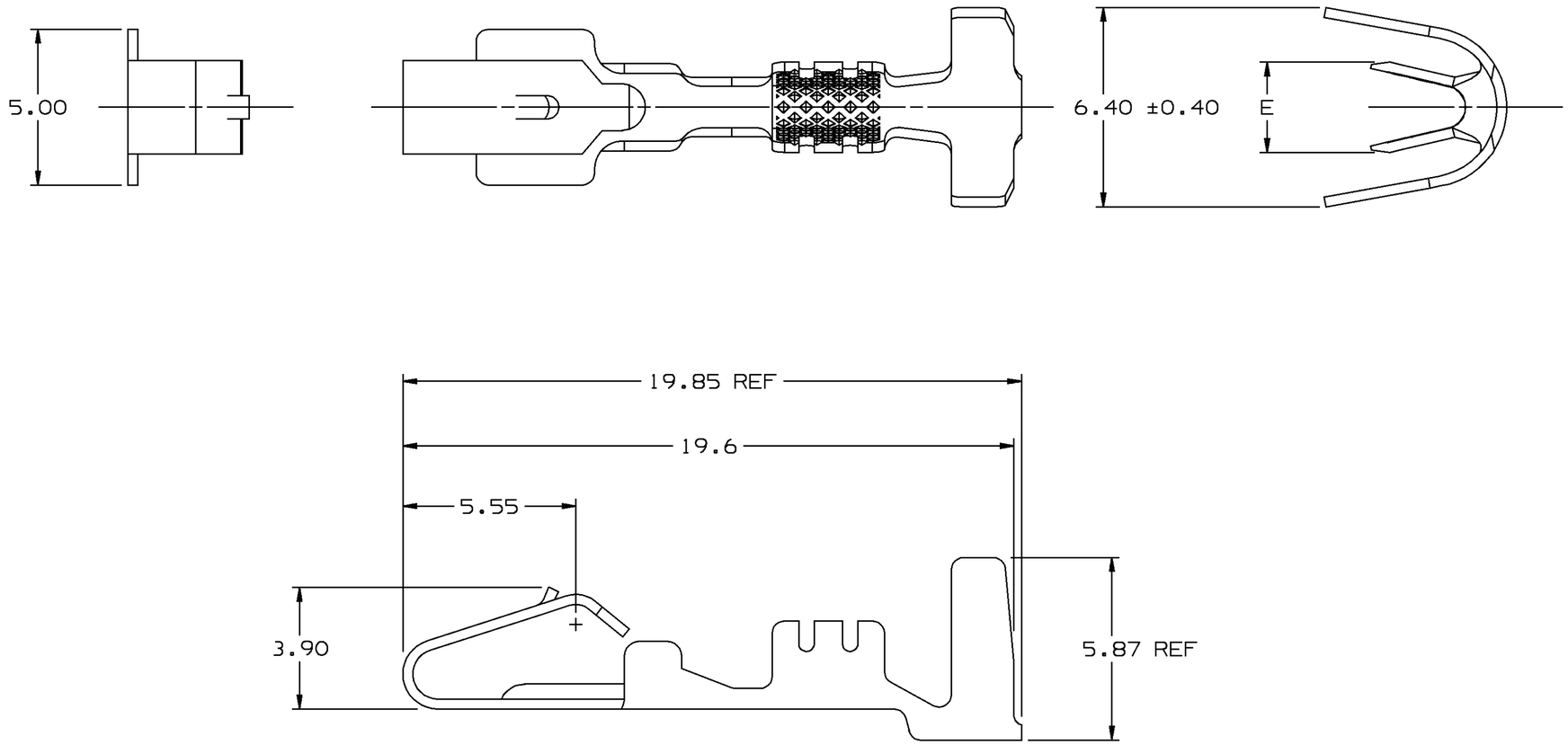

DATE	SYM	REVISION RECORD	AUTH	DR	CK
20MR96	—	ALL PARTS - PID CREATED			
		- NO REV UPDATE REQ'D	960015	JHV	WTP

PART NO 1530 4847

PACKARD ELECTRIC DIVISION
GENERAL MOTORS CORPORATION
WARREN, OHIO

NOTES:

1. UNLESS OTHERWISE SPECIFIED AND/OR INDICATED: DIMENSIONS ARE TO FACE OF VIEW SHOWN AND AUTOMATICALLY ROUNDED BY COMPUTER FOR INSPECTION. (SEE MATH MODEL FOR PRECISE DIMENSION)
2. THIS TERMINAL DESIGNED TO CRIMP AROUND AND RETAIN CAVITY SEALS SHOWN ON DRAWING 12010295
3. THIS TERMINAL MATES TO 12129049 LP SOC OR EQUIVALENT
4. DIMENSIONS MARKED "REF" ARE FOR REFERENCE ONLY AND NO TOLERANCE LIMITS ARE ESTABLISHED

PART NO	REV		MAT'L SIZE	MAT'L SPEC	SIZE (MM²)	I.D.	DIA	TYPE	
15304621	A		0.32 X 33.32	P1519	0.35 - 0.5	21			2.2
12129053	C		0.32 X 33.32	P1519	0.8 - 1.0	17			2.9
PLATED					CABLE				E

Unigraphics II

THIRD ANGLE PROJECTION

METRIC
DIMENSIONS ARE IN MILLIMETERS UNLESS OTHERWISE SPECIFIED

TOLERANCE UNLESS OTHERWISE SPECIFIED
DECIMAL: ANGULAR ±2°
ONE PLACE ±0.3
TWO PLACE ±0.15

CODE NO 6901
QC
DES
DWG DATE 20MR96
DR JOSE HUERTA 20MR96
SCALE 8:1
CK W.TURNBULL 21MR96
REFERENCE NO 15304847 "A1" SIZE
APPR
VOL CM³

MATERIAL SPEC
SEE CHART

NAME
TERM LP SOC GROUND SLD

PART NUMBER
1530 4847
PRODUCT INFORMATION DWG

SIZE A2