DO NOT SCALE

PART NO 1209 2931

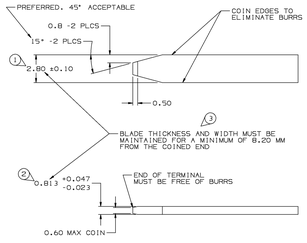

MATERIAL SPECIFICATIONS

RECOMMENDED
BASE METAL - CDA-210, GILDING, EXTRA SPRING TEMPER
PLATING - 0.0050 ±0.0025 MM THK TIN

MINIMUMS
ELECTRICAL CONDUCTIVITY - ≥ 20% IACS @20°C. USE OF A MATERIAL WITH CONDUCTIVITY < 20% IACS MUST BE APPROVED BY PACKARD ELECTRIC MATERIALS ENGINEERING.

TENSILE STRENGTH - 407 MPa

PLATING - FOR LOW ENERGY (≤ 5 V) AND NON-PASSENGER COMPARTMENT POWER CIRCUITS, 0.0050 ±0.0025 MM THICK TIN. FOR MATERIALS CONTAINING 10% OR MORE ZINC, AN UNDERPLATE OF COPPER 0.0050 ±0.0025 MM THICK IS REQUIRED.

BLADE THICKNESS
UNPLATED = 0.813 ±0.025
TIN PLATED = 0.823 ±0.030

MATING BLADE INFORMATION

SCALE 8:1

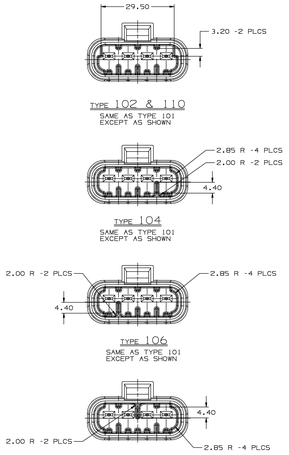

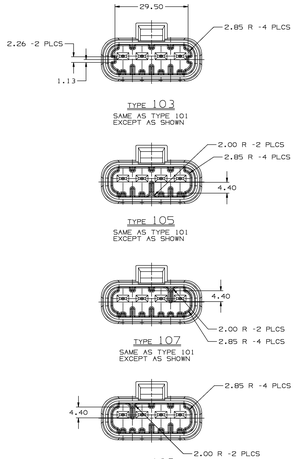

PART NO 1209 2931

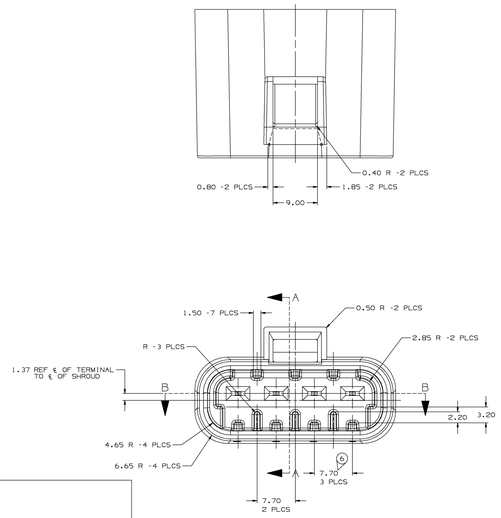

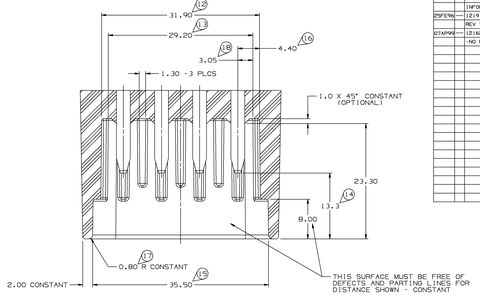

SECTION B-B

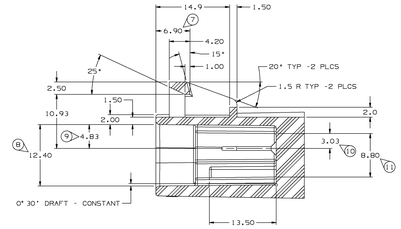

SECTION A-A

PART NO 1209 2931

DATE	SYM	REVISION RECORD	AUTH	DR	CK
25FEB96	—	RELEASED WITH NO PHYSICAL CHANGE & REVISED MATING INFORMATION CHART	16908	EBS	KJB
25FEB96	—	12191660 - RELEASED TO REV "A"	96000	EBS	KJB
07APR99	—	12162450 - REVISED CHART - NO REV. UPDTED REQ'D	19936	DA	JJB

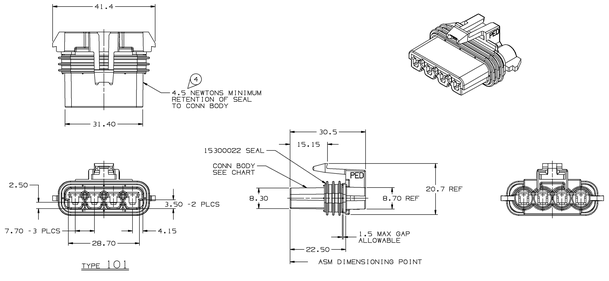

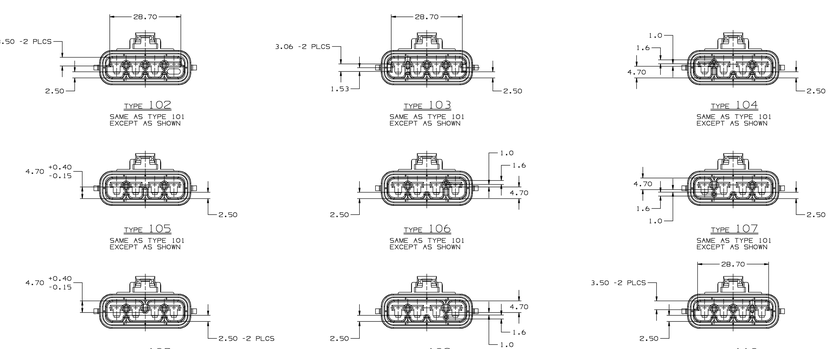

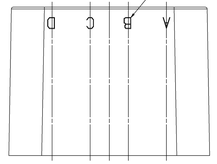

NOTES:

1. UNLESS OTHERWISE SPECIFIED AND/OR INDICATED:
   DIMENSIONS ARE TO FACE OF VIEW SHOWN AND AUTOMATICALLY ROUNDED BY COMPUTER FOR INSPECTION. (SEE MATH MODEL FOR PRECISE DIMENSION)
   ALL RADII 0.40
   DRAFT IS 1° ON ALL OUTSIDE SURFACES
2. RECOMMENDED MATERIAL- 30% GLASS FILLED POLYESTER.
3. TERMINAL MUST WITHSTAND A MINIMUM PUSHOUT OF 70 NEWTONS.
4. USE TAXI 12092919 FOR INLINE CONNECTOR INFORMATION.

MATING INSERT MOLDED "PANEL" CONNECTOR INFORMATION

SCALE 4:1

GENERAL NOTE

"◇" DENOTES DIMENSIONS AND CHARACTERISTICSTHAT ARE IMPORTANT TO THE FUNCTION AND/OR PROCESSING OF THE PART THAT HAVE SPECIAL ACCEPTANCE CRITERIA FOR PRODUCTION APPROVAL. THIS DRAWING HAS 18 SNOWCONES.

NOTES:

1. DIMENSIONS ARE TO FACE OF VIEW SHOWN AND AUTOMATICALLY ROUNDED BY COMPUTER FOR INSPECTION. (SEE MATH MODEL FOR PRECISE DIMENSION)
2. MATING COMPONENTS:
   CONNECTOR - SEE CHART
   CAVITIES TO ACCEPT 12077412 TERMINAL OR EQUIVALENT
   SECONDARY TERMINAL LOCK 12092733 OR EQUIVALENT
   CABLE SEAL 12015323 OR EQUIVALENT
   CONNECTOR POSITION ASSURANCE LOCK 12052834 OR EQUIVALENT
3. DIMENSIONS MARKED "REF" ARE FOR REFERENCE ONLY AND NO TOLERANCE LIMITS ARE ESTABLISHED.
4. SEALING CODE 3.
5. WHEN PARTS ARE SHIPPED THEY MUST BE PACKED IN PLASTIC BAGS OR SHIPPING CONTAINERS MUST BE LINED WITH PLASTIC LINERS. BAGS OR LINERS MUST BE SEALED TO AVOID FOREIGN MATTER.

ASM PART NO	REV	STATUS	TYPE	CONNECTOR	MATING CONN
12162450	A		101	12162449	12092734
12191660	A		104	12191659	12191658
12146541	A		109	12146540	12146539
12146371	A		108	12146370	12146369
12146081	A		107	12146080	12146053
12129569	A		106	12129568	12129567
12129398	A		105	12129397	12129285
12110406	A		110	12110405	12092735
12110386	A		103	12110385	12110384
12092739	A		102	12092738	12092735
12092737	A		101	12162449	12092734

104	12191658	12191660
109	12146539	12146541
108	12146369	12146371
107	12146053	12146081
106	12129567	12129569
105	12129285	12129398
110	12092735	12110406
103	12110384	12110386
102	12092735	12092739
101	12092734	12092737
TYPE	CONNECTOR	MATING CONN & SEAL ASM

PART NO 1209 2931

Ulysphin II

THIRD ANGLE PROJECTION

METRIC
DIMENSIONS ARE IN MILLIMETERS UNLESS OTHERWISE SPECIFIED
TOLERANCES UNLESS OTHERWISE SPECIFIED
DECIMALS ANGULARS ±2°
ONE PLACE ±0.3
TWO PLACE ±0.15

CODE NO	6900
DR	-C-5110
DWN	
DWN DATE	07AUG89
DR JEFF REEVES 07AUG89	
SCALE	2:1
DR STEVE MARZO 01JAN90	
REFERENCE NO	1209293Z "R7" SIZE
APPR R.POLENGHI 11JAN90	
MATERIAL SPEC	
FINISH	
NAME	SEE DRAWING
ASM CONN F M/P 280	
PART NUMBER	1209 2931
SIZE	R7
PRODUCT INFORMATION DRAWING	

DOC 5511

SHEET 1 OF 1

PACKARD ELECTRIC DIVISION
WARREN, OHIO