SYMBOL DEFINITION			MISSING SYMBOLS
A DIMENSION WITHOUT AN INSPECTION REPORT SYMBOL (77) DOES NOT REQUIRE INSPECTION. IT MAY BE CONTROLLED ON THE INDIVIDUAL COMPONENT DRAWING.	TOTAL NO OF INSPECTIONS REQUIRED	77	NO MISSING SYMBOL NUMBER
	LAST NO. USED	58	

DWG STATUS					ZONE	REVISION HISTORY	AUTH	DR	APVD 1	APVD 2
DATE	STG	REV	N/P	CHG						
04SEO2	R	01	-	-	-	ALL PARTS - SECONDARY TERMINAL LOCK NOTE WAS 12047664, ADDED NOTES (2 PLCS) & REVISED MAT'L SPEC	230019	RVP	RVP	GMC
11JA05	R	02	-	-	-	RELAXED TOLERANCES	262445	MM	MM	BG

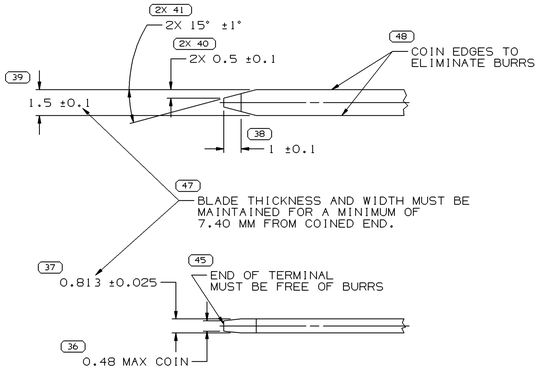

MATERIAL SPECIFICATIONS

RECOMMENDED

BASE METAL - CDA-210, EXTRA SPRING TEMPER

PLATING - 0.005 ±0.0025 MM THICK TIN

MINIMUMS

ELECTRICAL CONDUCTIVITY - ≥20% IACS AT 20°C. USE OF A MATERIAL WITH CONDUCTIVITY ≤ 20% IACS MUST BE APPROVED BY PACKARD ELECTRIC MATERIALS ENGINEERING.

TENSILE STRENGTH - 407 MPa

PLATING - FOR LOW ENERGY (≤5v) AND NON-PASSENGER COMPARTMENT POWER CIRCUITS, 0.005 ±0.0025 MM THICK TIN. FOR MATERIALS CONTAINING 10% OR MORE ZINC, AN UNDERPLATE OF COPPER 0.0050±0.0025 MM THICK IS REQUIRED.

MATING BLADE INFORMATION

SCALE 10:1

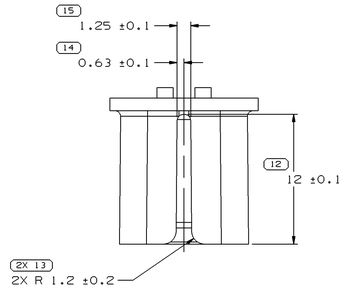

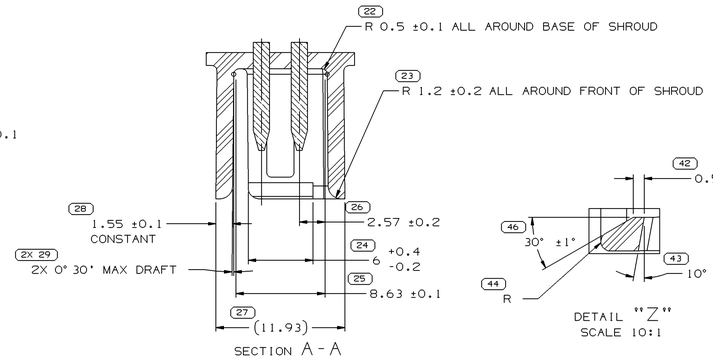

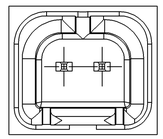

TYPE 102
SAME AS TYPE 101
EXCEPT AS SHOWN

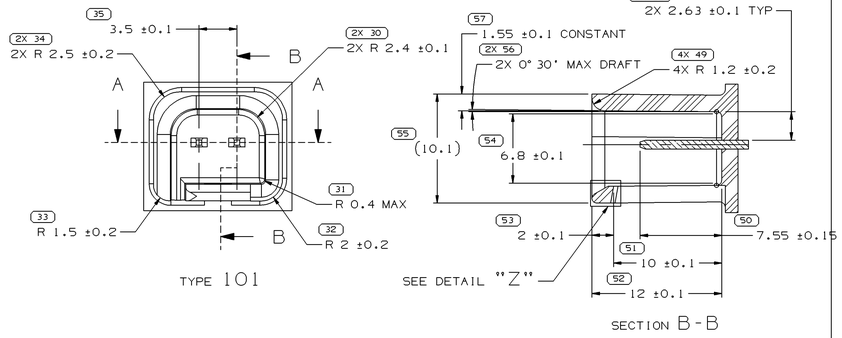

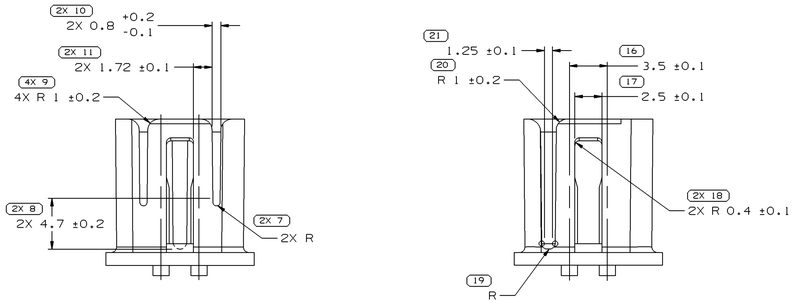

MATING CONNECTOR INFORMATION

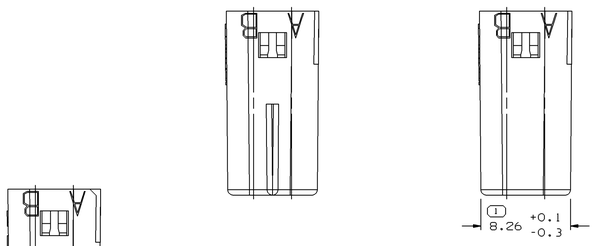

OPTIONAL CONSTRUCTION

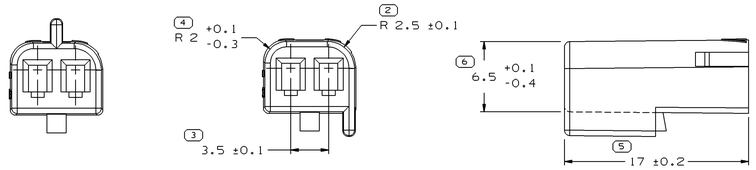

TYPE 102
SAME AS TYPE 101
EXCEPT AS SHOWN

TYPE 101

NOTES

1. UNLESS OTHERWISE SPECIFIED AND/OR INDICATED: DIMENSIONS ARE TO FACE OF VIEW SHOWN AND AUTOMATICALLY ROUNDED BY COMPUTER FOR INSPECTION (SEE MATH MODEL FOR PRECISE DIMENSIONS). FOR ALL OTHER DIMENSIONS NOT SHOWN BUT REQUIRED FOR TOOL BUILD, SEE MATH MODEL FOR PRECISE TOOL PATH DATA.
2. MATERIAL RECYCLING CODE >PA66< PER SAE J1344. (2.3)X(0.1) RAISED CHARACTERS AS SHOWN TO BE LOCATED ON ANY EXTERIOR SURFACE. OPTIONAL CONSTRUCTION TO BE NO MATERIAL RECYCLING CODE.
3. THIS PART IS NOT CONTROLLED FOR AUTOMATIC FEEDING.
4. MATING COMPONENTS OR EQUIVALENT: TERMINAL 12047883
5. THIS PART ACCEPTS THE FOLLOWING COMPONENTS OR EQUIVALENT: SECONDARY TERMINAL LOCK 15324070
6. (2.3)X(0.1) RAISED DELPHI CORPORATE BRAND TO BE LOCATED ON ANY EXTERIOR SURFACE, PREFERABLY VISIBLE AT FINAL ASSEMBLY. OPTIONAL CONSTRUCTION TO BE "PED" OR NO LOGO.

12059253	R	C4			102	M3592015 PA66 HS IM GRN LT	12059254	0.587
12059251	R	D4			101	M3592004 PA66 HS IM RED	12059252	0.588
PART NO	STG	REV	N/P	STATUS	TYPE	MATERIAL SPECIFICATION AND COLOR	MATING CONNECTOR	VOL CM³

5 PROCESS SENSITIVE DIMENSION

DIMENSIONS ENCLOSED IN ( ) INDICATE REFERENCE DIMENSIONS AND NO TOLERANCE LIMITS ARE ESTABLISHED

DIMENSIONAL RANGE (MM)									CHART E1
FROM TO	> 0 20	> 20 30	> 30 70	> 70 100	>100 150	>150 200	>200 250	>250 300	>300 400
TOLERANCE UNLESS OTHERWISE SPECIFIED									
	±0.15	±0.2	±0.3	±0.4	±0.5	±0.6	±0.8	±1	±1.2
ANGULAR TOLERANCE ±2°									

THIRD ANGLE PROJECTION

DO NOT SCALE

USE MATH DATA

UNIGRAPHICS

DWG TYPE	PART DRAWING
STYLE	
VOLUME (CM³)	0.588
DISTR CODE	

UNLESS OTHERWISE SPECIFIED

THIS DOCUMENT IS IN ACCORDANCE WITH ASME Y14.5M-1994 AS AMENDED BY THE IAW GLOBAL DIMENSIONING AND TOLERANCING DOCUMENT. ALL GEOMETRIC TOLERANCES TOLERANCING ASSUMES ALL DIMENSIONS SPECIFIED FROM A1 MMC1 DOES NOT APPLY WHEN RELATIONSHIP BETWEEN FEATURES IS ESTABLISHED BY ORIENTATION OR LOCATION TOLERANCES. SEPARATE POSITION CALLOUTS MAY BE GAGED SEPARATELY, REGARDLESS OF DATUM REFERENCE.

ALL DIMENSIONS ARE IN MILLIMETERS

REFERENCE

DELPHI

DELPHI PACKARD ELECTRIC SYSTEMS
WARREN, OH

		DATE
DR		
APVD1	ASDF	30MY85
APVD2	A. SWARTZ	30MY85
APVD3	R. PETROSKY	04JN85
APVD4		
APVD5		

SUBSTANCES OF CONCERN AND RECYCLED CONTENT PER DELPHI 10949001

MATERIAL: SEE CHART

DRAWING NAME: TAXI CONN 2 F M/P 150

DRAWING NUMBER: 12059287

SIZE	SCALE	FRAME NO	SHEET NO	STG	REV	N/P
A0	5:1	1 OF 1	1 OF 1	R	02	-