SYMBOL DEFINITION	MISSING NUMBERS	
A DIMENSION WITHOUT AN INSPECTION REPORT SYMBOL ( ) DOES NOT REQUIRE INSPECTION. IT MAY BE CONTROLLED ON AN INDIVIDUAL COMPONENT DRAWING.	TOTAL NO. OF SYMBOLS ON DRAWING	42
	LAST NO. USED	37

DWG STATUS DATE	STS	REV	N/P	CHG	ZONE	REVISION HISTORY	AUTH	DR	APVD 1	APVD 2
21MY99	R	01	-	-	-	CLEARED REV COL & 15354670 - RELEASED	990005	AAS	RMM	EH
23AU99	R	02	-	-	-	15354670 - REVISED MAT'L SPEC	196609	KBD	KBD	EJM
13SE99	R	03	-	-	-	15354670 - REVISED MAT'L SPEC	196680	MAC	MAC	EJM
06OC99	R	04	-	-	-	15354670 - CORRECTED REVISION LEVEL	197402	MAC	MAC	EJM
26JA00	R	05	-	-	-	15354670 - UPDATED PDM ATTRIBUTES	198517	MAC	MAC	EJM
10AU01	R	06	-	-	-	15418340 - RELEASED, 12103514-16 ADDED "TYPE" COLUMN TO CHART	212640	EES	JLJ	RAP
26MR04	R	07	-	-	-	ALL PARTS - REVISED "*" REFERENCE TO NOTE 2	253370	CCV	JAA	RAP
24AU05	R	08	-	-	-	1539139 - RELEASED; ALL PARTS - REVISED MAT'L SPEC TO LATEST W-SPEC STANDARD	271323	RH	RH	WM

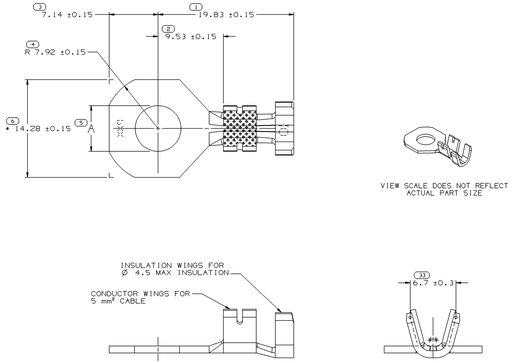

TYPE 201

12103512	B3	-	1.024 X 26.97	M3649155 210 GILDING 3/4 HD SN PLTD	6.7
PART NO	REV	N/P	STATUS	MAT'L SIZE	MATERIAL SPECIFICATION	Ø A±0.1
PLATED					

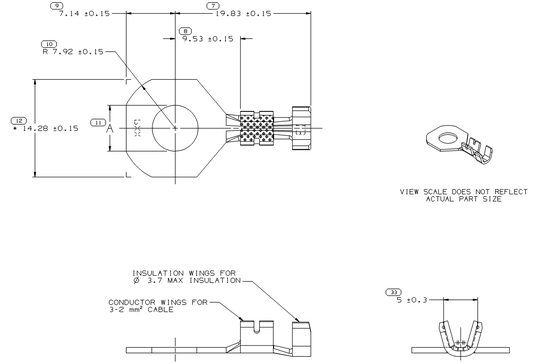

TYPE 202

12103513	B3	-	0.813 X 26.97	M3649129 210 GILDING 3/4 HD SN PLTD	6.7
PART NO	REV	N/P	STATUS	MAT'L SIZE	MATERIAL SPECIFICATION	Ø A±0.1
PLATED					

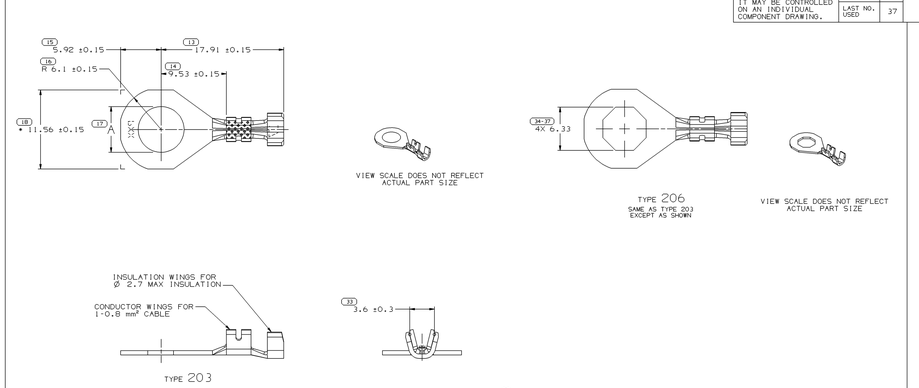

TYPE 203

TYPE 206
SAME AS TYPE 203 EXCEPT AS SHOWN

VIEW SCALE DOES NOT REFLECT ACTUAL PART SIZE

13539139	01	-	0.645 X 23.83	M3649097 210 GILDING 3/4 HD SN PLTD	-	206
15418340	01	AB	0.645 X 23.83	M3649097 210 GILDING 3/4 HD SN PLTD	-	206
12103516	B4	-	0.645 X 23.83	M3649097 210 GILDING 3/4 HD SN PLTD	4.3	203
12103515	B4	-	0.645 X 23.83	M3649097 210 GILDING 3/4 HD SN PLTD	5.4	203
12103514	B4	-	0.645 X 23.83	M3649097 210 GILDING 3/4 HD SN PLTD	6.7	203
PART NO	REV	N/P	STATUS	MAT'L SIZE	MATERIAL SPECIFICATION	Ø A±0.1	TYPE
PLATED					

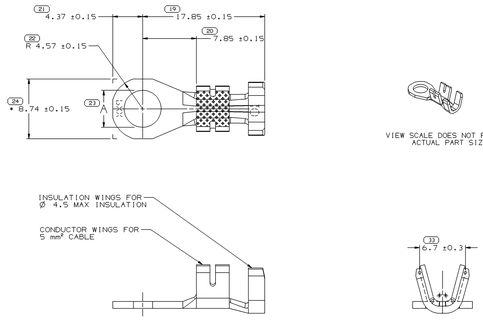

TYPE 204

12103516	B3	-	1.024 X 22.22	M3649152 210 GILDING 3/4 HD SN PLTD	4.3
12103517	B3	-	1.024 X 22.22	M3649152 210 GILDING 3/4 HD SN PLTD	5.4
PART NO	REV	N/P	STATUS	MAT'L SIZE	MATERIAL SPECIFICATION	Ø A±0.1
PLATED					

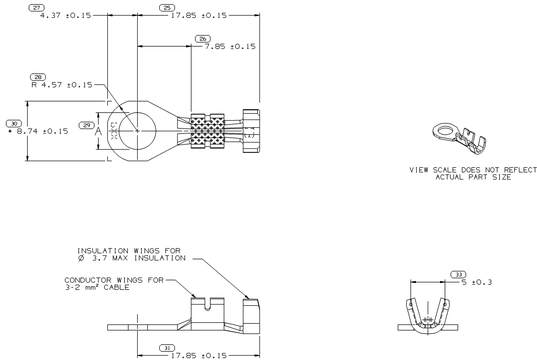

TYPE 205

15354670	03	AD	0.813 X 22.22	M3720124 C171 1/4 HT SN PLTD	5.4
12103520	B3	-	0.813 X 22.22	M3649124 210 GILDING 3/4 HD SN PLTD	4.3
12103519	B3	-	0.813 X 22.22	M3649124 210 GILDING 3/4 HD SN PLTD	5.4
PART NO	REV	N/P	STATUS	MAT'L SIZE	MATERIAL SPECIFICATION	Ø A±0.1
PLATED					

DRAWING NUMBER						
12103500						
SIZE	SCALE	FRAME NO	SHEET NO	STS	REV	N/P
A1x3	5:1	2 OF 2	2 OF 2	R	08	-

NOTES

1. UNLESS OTHERWISE SPECIFIED AND/OR INDICATED:
   DIMENSIONS ARE TO FACE OF VIEW SHOWN AND AUTOMATICALLY ROUNDED BY COMPUTER FOR INSPECTION. (SEE MATH MODEL FOR PRECISE DIMENSIONS.) FOR ALL OTHER DIMENSIONS NOT SHOWN BUT REQUIRED FOR TOOL BUILD, SEE MATH MODEL FOR PRECISE TOOL PATH DATA.

2. "*" INDICATES DIMENSIONS MADE AT CUT-OFF AND CRIMP DIE.

4.3	M4	#8
5.4	M5	#10
6.7	M6	1/4"
Ø A	METRIC	STANDARD
	SCREW SIZE	

(33) PROCESS SENSITIVE DIMENSION

DIMENSIONS ENCLOSED IN ( ) INDICATE REFERENCE DIMENSIONS AND NO TOLERANCE IS APPLIED TO THEM.

DIMENSIONAL RANGE (MM)	CHART ID
FROM / TO	
0 / 3	3-12

TOLERANCE UNLESS OTHERWISE SPECIFIED (MM)
±0.1
ANGULAR TOLERANCE ±2°

THIRD ANGLE PROJECTION

DO NOT SCALE — USE MATH DATA

DELPHI

DELPHI PACKARD ELECTRIC SYSTEMS
WARREN, OH

DWG TYPE	PART DRAWING
STYLE	
VOLUME (CM³)	SYSTEM CODE

UNLESS OTHERWISE SPECIFIED
THIS DOCUMENT IS IN ACCORDANCE WITH ASME Y14.5M-1994 ALL DIMENSIONS ARE AFTER PLATING, PAINTING, TOLERANCING ANSI/ASME Y-14.5M - 1994 - ALL GEOMETRIC TOLERANCES AND RELATED SYMBOLS APPLY UPON - FULLY DEFINED FORM AS DEFINED BY ASME Y14.5M-1994 UNLESS OTHERWISE SPECIFIED. TO BE DETERMINED BY INSPECTION OR LOCATION TOLERANCES. ALL DIMENSIONS ARE BASIC UNLESS OTHERWISE SPECIFIED. REGARDLESS OF DATUM REFERENCE.
ALL DIMENSIONS ARE IN MILLIMETERS

DR	DATE
APVD1 S. LIMON A.	08JA97
APVD2 R. RAMOS S.	08JA97
APVD3 ROBERT LAIRD	01MY97
APVD4	
APVD5	

SUBSTANCES OF CONCERN: PBC RECYCLED CONTENT PER DELPHI (DP4900)

MATERIAL
SEE CHART

DRAWING NAME
TAXI TERM RING NONE

DRAWING NUMBER						
12103500						
SIZE	SCALE	FRAME NO	SHEET NO	STS	REV	N/P
A1x3	5:1	1 OF 2	2 OF	R	08	-

12103500