SYMBOL DEFINITION		
THE NUMBER INSIDE THE SYMBOL CORRESPONDS TO THE NUMBER ON THE INSPECTION REPORT FOR THIS DRAWING/PART NUMBER	TOTAL NO. OF SYMBOLS DRAWING	22
	LAST NO. USED	33

MISSING NUMBERS

DWG STATUS				ZONE	REVISION HISTORY		AUTH	DR	CK	APVD
DATE	STG	REV	SUP							
13/09/01	R	001	-	-	CLEARED REVISION COLUMN	199424	JTV	AUG	JF	
					15358637 & 15366625 - REVISED MAT'L SPEC					
13/09/01	R	002	-	-	15326164 - OBSOLETE	000003	JTV	AUG	JF	

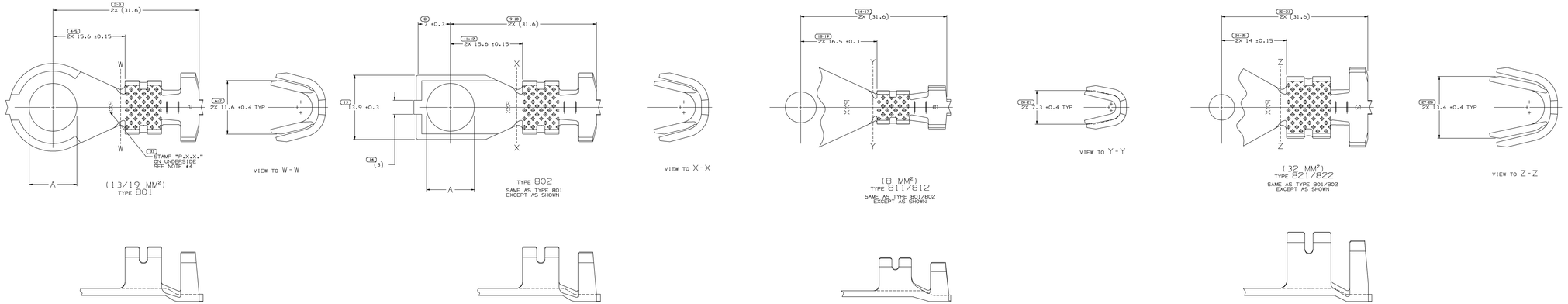

SHEARED CONSTRUCTION

ALTERNATE CONSTRUCTION

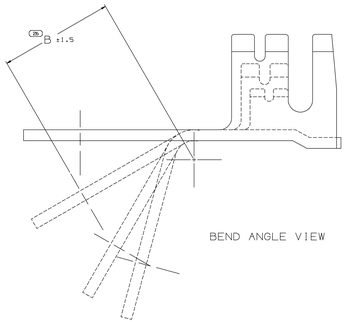

BEND ANGLE VIEW

(A)	10.34 ±0.13	1/8	M10
(B)	8.5 ±0.13	5/16	M8
(C)	6.7 +0.05/-0.2	1/4	M6
(D)	5.53 ±0.13	3/16	M5
A DIA		STANDARD	METRIC
		SCREW/STUD SIZE	

NOTES

1. UNLESS OTHERWISE SPECIFIED AND/OR INDICATED: DIMENSIONS ARE TO FACE OF VIEW SHOWN AND AUTOMATICALLY ROUNDED BY COMPUTER FOR INSPECTION (SEE MATH MODEL FOR PRECISE DIMENSIONS). FOR ALL OTHER DIMENSIONS NOT SHOWN BUT REQUIRED FOR TOOL BUILD, SEE MATH MODEL FOR PRECISE TOOL PATH DATA.
2. FOR SOLDERABILITY REQUIREMENTS, SEE ESO-1503.
3. FOR ALTERNATIVE CABLE APPLICATIONS, SEE ESA-605.
4. "P.X.X.X" INDICATES "P" PLUS LAST TWO DIGITS OF MAKE DIE SERIES NUMBER, 1P01, P02 & ETC1.

| | | | | | | |