DO NOT SCALE

PART NO 1530 4848

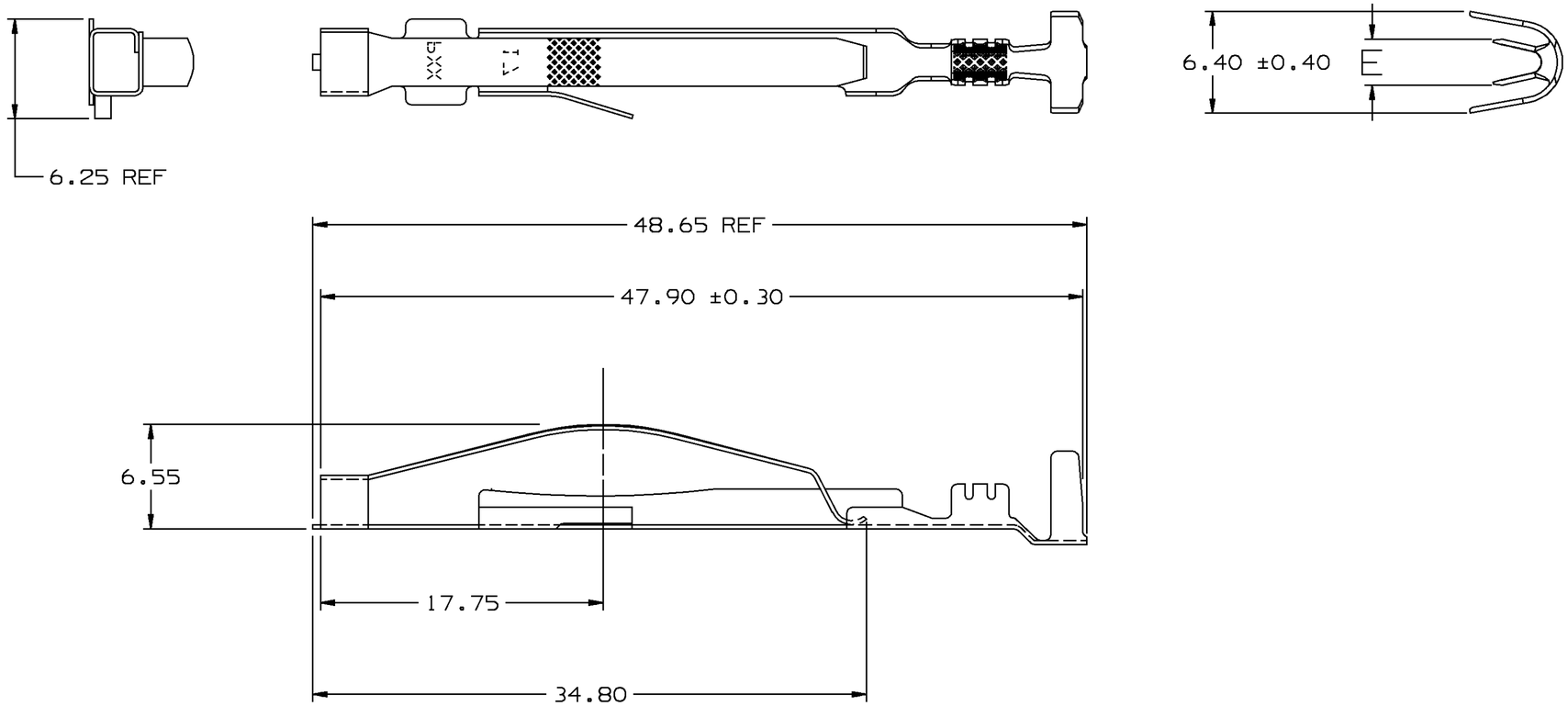

NOTES:

1. UNLESS OTHERWISE SPECIFIED AND/OR INDICATED:
   DIMENSIONS ARE TO FACE OF VIEW SHOWN AND
   AUTOMATICALLY ROUNDED BY COMPUTER FOR INSPECTION.
   (SEE MATH MODEL FOR PRECISE DIMENSION)
2. THIS TERMINAL DESIGNED TO CRIMP AROUND AND RETAIN CAVITY SEALS SHOWN ON DRAWING 12010295
3. THIS TERMINAL MATES TO 12129049 LP SOC OR EQUIVALENT
4. TANG RECOVERY - WHEN COMPRESSED INTO 4.45 MM FUNCTIONAL GAGE 5.65±0.30/-0.15 TANG MUST RECOVER TO A MINIMUM OF 4.85 MIN
5. DIMENSIONS MARKED "REF" ARE FOR REFERENCE ONLY AND NO TOLERANCE LIMITS ARE ESTABLISHED

DATE	SYM	REVISION RECORD	AUTH	DR	CK
26MR96	—	ALL PARTS - PID CREATED			
		- NO REV UPDATED REQ'D	960015	JHV	PYP

PART NO 1530 4848

PACKARD ELECTRIC DIVISION
GENERAL MOTORS CORPORATION
WARREN, OHIO

PART NO	REV	STATUS	MAT'L SIZE	MAT'L SPEC	SIZE (MM²)	I.D.	DIA	TYPE	
15304622	A		0.254 X 55.35	M914	0.35 - 0.5	21			2.10
12129052	C		0.254 X 55.35	M914	0.8 - 1.0	17			2.80
PLATED					CABLE				

Unigraphics II

THIRD ANGLE PROJECTION

METRIC
DIMENSIONS ARE IN MILLIMETERS UNLESS OTHERWISE SPECIFIED

TOLERANCE UNLESS OTHERWISE SPECIFIED
DECIMAL: ANGULAR ± 2°
ONE PLACE ± 0.3
TWO PLACE ± 0.15

CODE NO 6901
QC
DES
DWG DATE 25MR96
DR JOSE HUERTA 26MR96
SCALE 4:1
CK PEDRO YABUR 27MR96
REFERENCE NO 15304848 "A1" SIZE
APPR MARCUS CHUGH 08MY96
VOL CM³

MATERIAL SPEC
SEE CHART

NAME
TERM LP SOC SLD

PART NUMBER
1530 4848
PRODUCT INFORMATION DWG

SIZE A2