D

THIS DRAWING AND DESIGN HEREON CONSTITUTES A PROPRIETARY DESIGN OF PACKARD ELECTRIC DIVISION AND IS NOT TO BE DUPLICATED OR REPRODUCED WITHOUT AUTHORITY OF PACKARD ELECTRIC DIVISION.

DO NOT SCALE

PART NO. 1204 8450

PACKARD ELECTRIC DIVISION
GENERAL MOTORS CORPORATION
WARREN, OHIO

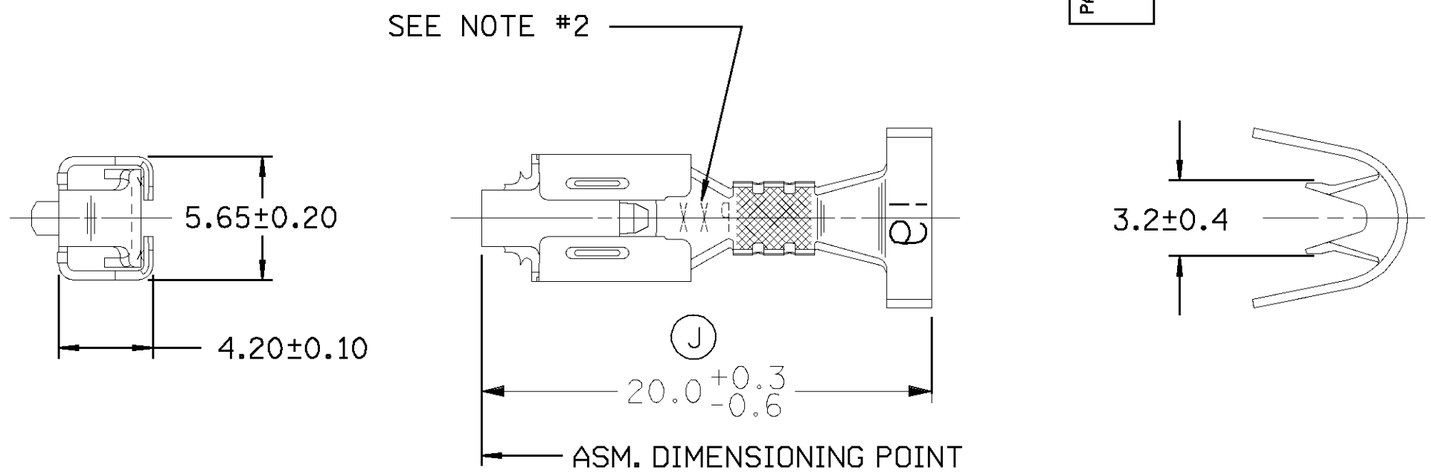

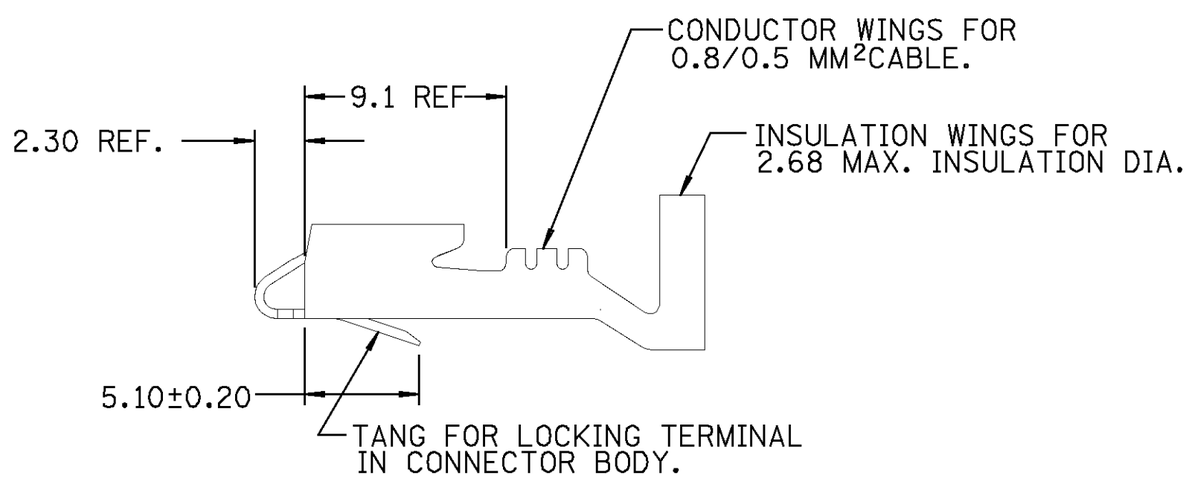

-0-
141-P
165
4274A
4174A
197A

NOTES—1. RECOMMENDED MATING BLADE 0.81 THK X 4.80 WIDE.
2. "PXX" INDICATES "P" PLUS LAST TWO DIGITS OF MAKE DIE SERIES NUMBER (P01, P02, P03, ECT).

DATE	SYM	REVISION RECORD	AUTHORITY	DR	CK
26JL88	—	REDRAWN & REVISED; REMOVED PATENT			
		PENDING; REV. LEVEL REMAINS AT "D"	120120	JN	CDH
19MY89	E	REVISED PICTURE	124520	JC	JC
310C89	F	ADDED NOTE 2.	131118	BAR	BAR
25JA90	G	REVISED PICTURE	132078	JC	JC
17AP90	H	REVISED GRAPHICS	133265	JC	JC
30JN96	J	REV LEVEL ADV	154898	RLB	BKD
14FE96	J1	20.0+0.3/-0.6 DIM WAS 20.0	168490	HH	HH

PED/INTERGRAPH EMS

FILE SPEC: $$$$USER$$$$ DGN$SPECIFICATION$$$$$$$$$$$$$ $$$$$SYTIME$$$$$$

THIRD ANGLE PROJECTION

METRIC
DIMENSIONS ARE IN MILLIMETERS UNLESS OTHERWISE SPECIFIED.

CODE NO. 6900

TOLERANCE UNLESS OTHERWISE SPECIFIED
DECIMAL: ONE PLACE ±0.3 TWO PLACE ±0.15
ANGULAR ±2°

Q.C.

DWG. DATE 17JL84 SCALE NONE

DR.

EST. NO.

CK. A. LAZORCHAK DATE 26JL84

REFERENCE NO. SHEET 1 12088010 "E" SIZE

APPR. J. DAUGHERTY DATE 28AU84

APPR. A. WINYARD DATE 28AU84

MATERIAL SPEC. 0.41 THK. TIN BRASS - TIN PLATED

NAME TERM F M/P 480

PART NO. 1204 8450
OUTLINE DRAWING

SIZE B

PACKARD ELECTRIC