SYMBOL DEFINITION		
A DIMENSION WITHOUT AN INSPECTION REPORT SYMBOL ( ) DOES NOT REQUIRE INSPECTION. IT MAY BE CONTROLLED ON THE INDIVIDUAL COMPONENT DRAWING.	TOTAL NO OF INSPECTIONS REQUIRED	79
	LAST NO. USED	72

MISSING SYMBOLS
NO MISSING SYMBOL NUMBER

DWG STATUS					ZONE	REVISION HISTORY	AUTH	DR	APVD	APVD
DATE	STS	REV	N/P	CHG					1	2
13JA05	R	01	-	-		12162859 - WAS SEPARATE DRAWING; 13519340 - RELEASED	262876	ADK	ADK	CD

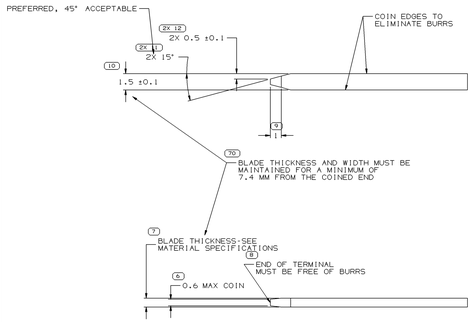

MATERIAL SPECIFICATIONS

RECOMMENDED
BASE METAL - CDA-210, GILDING, EXTRA SPRING TEMPER
PLATING - 0.0050 ±0.0025 MM THK TIN

MINIMUMS
ELECTRICAL CONDUCTIVITY - ≥ 20% IACS @20°C. USE OF A MATERIAL WITH CONDUCTIVITY < 20% IACS MUST BE APPROVED BY PACKARD ELECTRIC MATERIALS ENGINEERING.

TENSILE STRENGTH - 407 MPa

PLATING - FOR LOW ENERGY (≤ 5 V) AND NON-PASSENGER COMPARTMENT POWER CIRCUITS, 0.0050 ±0.0025 MM THICK TIN, FOR MATERIALS CONTAINING 10% OR MORE ZINC, AN UNDERPLATE OF COPPER 0.0050 ±0.0025 MM THICK IS REQUIRED.

BLADE THICKNESS
UNPLATED : 0.813 ±0.025
TIN PLATED : 0.823 ±0.030

MATING BLADE INFORMATION

INSPECTION SYMBOLS ARE FOR REFERENCE ONLY
SCALE 8:1

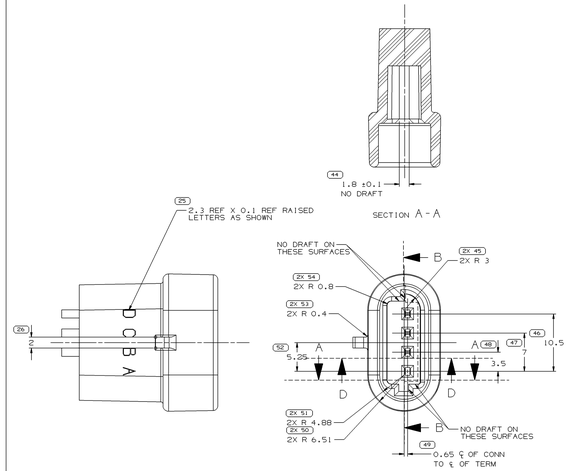

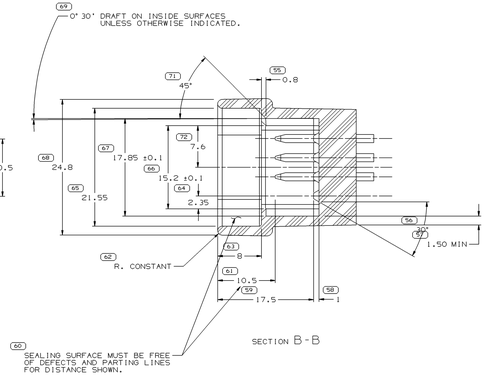

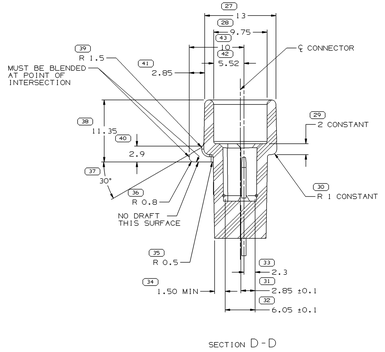

NOTES:

1. UNLESS OTHERWISE SPECIFIED AND/OR INDICATED:
   DIMENSIONS ARE TO FACE OF VIEW SHOWN AND AUTOMATICALLY ROUNDED BY COMPUTER FOR INSPECTION. (SEE MATH MODEL FOR PRECISE DIMENSION)
   ALL RADII 0.4
   DRAFT IS 1° ON ALL OUTSIDE SURFACES

2. WHEN USING THIS INFORMATION FOR A NEW DESIGN, REQUEST THE LATEST COPY OF THIS PRINT FROM PACKARD ELECTRIC.

RECOMMENDED MATERIAL: GLASS REINFORCED NYLON OR POLYESTER

MATING CONNECTOR INFORMATION

INSPECTION SYMBOLS ARE FOR REFERENCE ONLY
SCALE 4:1

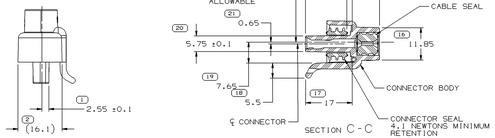

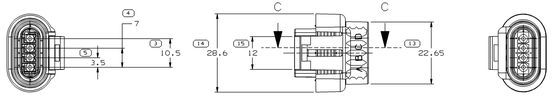

NOTES:

1. UNLESS OTHERWISE SPECIFIED AND/OR INDICATED:
   DIMENSIONS ARE TO FACE OF VIEW OF SHOWN AND AUTOMATICALLY ROUNDED BY COMPUTER FOR INSPECTION. (SEE MATH MODEL FOR PRECISE DIMENSION)
   ALL RADII 0.40
   DRAFT IS 1° ON ALL OUTSIDE SURFACES
   CAVITIES ARE IDENTICAL
   LOCKING FEATURES ARE IDENTICAL

1. CAVITIES TO ACCEPT 12124075 TERMINAL OR EQUIVALENT. MAXIMUM CABLE DIMEETER 2.68MM.

2. WHEN PARTS ARE SHIPPED THEY MUST BE PACKED IN PLASTIC BAGS OR SHIPPING CONTAINERS MUST BE LINED WITH PLASTIC LINERS. BAGS OR LINERS MUST BE SEALED TO AVOID ENTRY OF FOREIGN MATTER.

3. FOR LEAD LENGTH CALCULATIONS, DISTANCE FROM MATING END OF CONNECTOR TO FRONT OF CABLE CORE IS 10.15/7.05.

4. MATING DEVICE IS THE DELCO-REMY ANGLE BASE IGNITION TIMING SYSTEM 1A.5.1.7.S1 IGNITION MODULE OR EQUIVALENT.

5. SEALING CODE 3

13519340	01			13519341	12078081	12040756	BLACK
12162859	A1	-	-	12162738	12078081	12040756	BE16E
PART NO	REV	N/P	STATUS	CONNECTOR	CABLE SEAL	CONNECTOR SEAL	CONNECTOR COLOR

DRAWING NUMBER							
13519522							
SIZE	SCALE	FRAME NO	SHEET NO	STS	REV	N/P	
A1x3	2:1	2 OF 2	1 OF 1	R	01	-	

DWG TYPE: PART DRAWING
STYLE
VOLUME: CWT
SYSTEM CODE

UNLESS OTHERWISE SPECIFIED
THIS DOCUMENT IS IN ACCORDANCE WITH ASME Y14.5M-1994 UNLESS OTHERWISE SPECIFIED. DIMENSIONS AND TOLERANCING ASSUME ∅ (PI). ALL GEOMETRIC TOLERANCES AND RELATED DATUMS APPLY AT MMC. MAX MATERIAL FORM IS USED FOR ALL DATUMS. ALL DIMENSIONS AND TOLERANCES TO BE ACHIEVED BY PRODUCTION OR LOCATION TOLERANCES. ALL DIMENSIONS AND TOLERANCES ARE TO BE MEASURED REGARDLESS OF DATUM REFERENCE.
ALL DIMENSIONS ARE IN MILLIMETERS

PROCESS SENSITIVE DIMENSION
DIMENSIONS ENCLOSED IN ( ) INDICATE REFERENCE DIMENSIONS AND NO TOLERANCE LIMITS ARE ESTABLISHED.
REFERENCE

DIMENSIONAL RANGE (MM)	0	>6	>30	>50	>70	>100	>150	>200	>250	>300
FROM		6	30	50	70	100	150	200	250	300
TO	3	20	30	50	70	100	150	200	250	300	400
TOLERANCE UNLESS OTHERWISE SPECIFIED										
±0.15	±0.21	±0.25	±0.31	±0.37	±0.43	±0.50	±0.62	±0.75	±0.87	±1.00
ANGULAR TOLERANCE ±2°										

THIRD ANGLE PROJECTION
DO NOT SCALE
USE MATH DATA

DELPHI
DELPHI PACKARD ELECTRIC SYSTEMS
WARREN, OH

		DATE
DR		
APVD1	ADAM D. KIMBERLIN	13JA05
APVD2	ADAM D. KIMBERLIN	13JA05
APVD3	C. DEPROFIO	13JA05
APVD4		
APVD5		
MATERIAL	SUBSTANCES OF CONCERN: PWC RECYCLED CONTENT PER DELPHI (DP4900)	
NOTES	SEE DRAWING	

DRAWING NAME
TAXI ASM CONN 4 F M/P 150.2 SLD

DRAWING NUMBER							
13519522							
SIZE	SCALE	FRAME NO	SHEET NO	STS	REV	N/P	
A1x3	2:1	1 OF 2	1 OF 1	R	01	-	

13519522