SYMBOL DEFINITION		MISSING SYMBOLS
A DIMENSION WITHOUT AN INSPECTION REPORT SYMBOL ☐ DOES NOT REQUIRE INSPECTION. IT MAY BE CONTROLLED ON THE INDIVIDUAL COMPONENT DRAWING.	TOTAL NO OF INSPECTIONS REQUIRED: 25	NO MISSING SYMBOL NUMBER
	LAST NO. USED: 15	

CHG STATUS					ZONE	REVISION HISTORY	AUTH	DR	APVD 1	APVD 2
DATE	STA	REV	N/P	CHG						
12MR02	R	B3	-	-		CREATED PD & MATERAIL SPEC WAS PD100111	222954	RH	RH	ET
18MR02	R	B4	-	-		ADDED NOTES	222802	EDV	EDV	ET
30NOV05	R	B5	-	-		REDRAW PART DRAWING ADDED MATING CONNECTOR INFO.	286819	WKC	BRB	SN

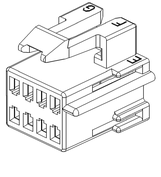

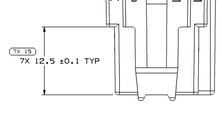

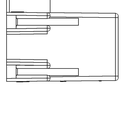

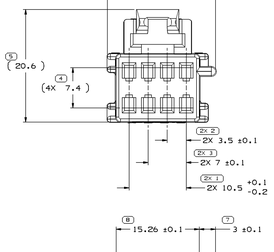

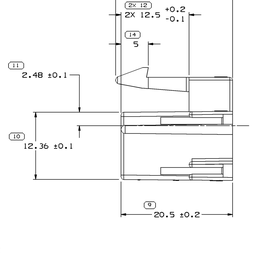

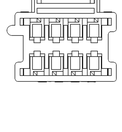

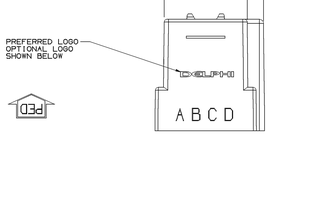

NOTES

1. UNLESS OTHERWISE SPECIFIED AND/OR INDICATED:

   DIMENSIONS ARE TO FACE OF VIEW SHOWN AND AUTOMATICALLY ROUNDED BY COMPUTER FOR INSPECTION (SEE MATH MODEL FOR PRECISE DIMENSIONS). FOR ALL OTHER DIMENSIONS NOT SHOWN BUT REQUIRED FOR TOOL BUILD, SEE MATH MODEL FOR PRECISE TOOL PATH DATA.
   ALL RADII 0.5
   DRAFT IS 0.5 DEG.ON ALL OUTSIDE SURFACES
   CAVITIES ARE IDENTICAL

2. MATERIAL RECYCLING CODE PER ISO 11469. (2,3)X(0.1) CHARACTERS AS SHOWN TO BE LOCATED ON ANY EXTERIOR SURFACE.

3. REFERENCE MATING COMPONENTS OR EQUIVALENT CONNECTOR 12064767

4. THIS PART ACCEPTS THE FOLLOWING COMPONENTS OR EQUIVALENT
   CAVITIES TO ACCEPT (12047883) TERMINAL
   SECONDARY TERMINAL LOCK (12064768) (2 PER CONNECTOR)
   POSITION ASSURANCE LOCK (12052834
   MAX INSULATION CRIMP MUST BE LESS THAN 2.65 HIGH AND 2.70 WIDE.

5. (2,3)X(0.1) DELPHI CORPORATE BRAND TO BE LOCATED ON ANY EXTERIOR SURFACE, PREFERABLY VISIBLE AT FINAL ASSEMBLY. OPTIONAL CONSTRUCTION FOR EXISTING TOOLING MAY BE "PED".

6. THIS CONNECTOR WILL PASS THROUGH A 26 DIA. MIN HOLE

7. THIS PART IS NOT CONTROLLED FOR AUTOMATIC FEEDING

8. FOR POLYSTER IN-PROCESS MOISTURE AND PART DEGRADATION LIMITS SEE ESO-1502.

DRAWING NUMBER								
12064766								
SIZE	SCALE	SHEET	SHEETS	REV	STA	REV	SKP	
A1x3	4:1	2 OF 2	1 OF 1	R	B5	-		

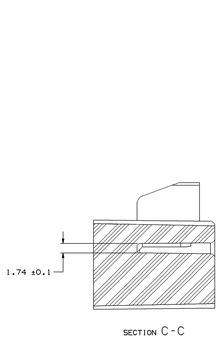

SECTION C-C

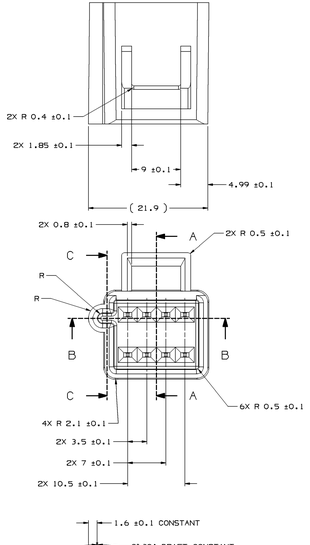

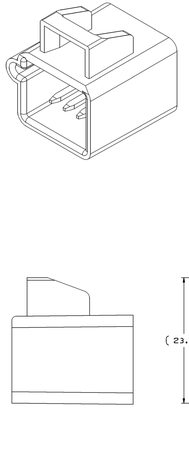

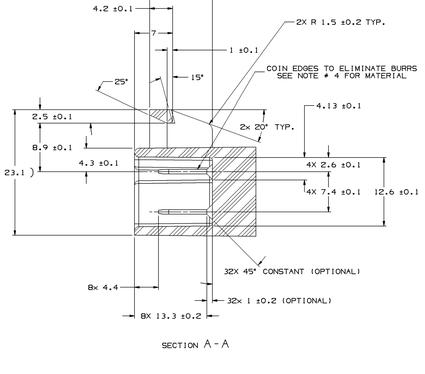

SECTION A-A

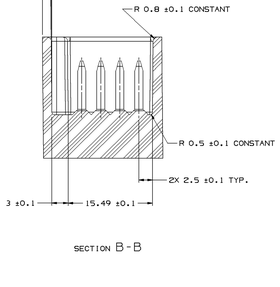

SECTION B-B

NOTES

1. UNLESS OTHERWISE SPECIFIED AND/OR INDICATED:

   DIMENSIONS ARE TO FACE OF VIEW SHOWN AND AUTOMATICALLY ROUNDED BY COMPUTER FOR INSPECTION (SEE MATH MODEL FOR PRECISE DIMENSIONS). FOR ALL OTHER DIMENSIONS NOT SHOWN BUT REQUIRED FOR TOOL BUILD, SEE MATH MODEL FOR PRECISE TOOL PATH DATA.
   ALL RADII 0.5 DRAFT IS .5 DEG. MAX ON ALL OUTSIDE SURFACES.

2. TERMINALS MUST WITHSTAND A MINIMUM PUSHOUT FORCE OF 89 N (20 LBS)

3. RECOMMENDED BODY MATERIAL:POLYESTER OR EQUIVALENT THERMOPLASTIC

4. REFER TO USCAR EWCAP001 DRAWING (BLADE GEOMETRY, MATERIAL & PLATING)

DWG TYPE	PART DRAWING
STYLE	
VOLUME (CM³) 2.850	SIZE D

UNLESS OTHERWISE SPECIFIED

THIS DRAWING IS IN ACCORDANCE WITH ASME Y14.100-1998 IS INTERPRET BY THE ASME Y14.5M-1994 UNLESS OTHERWISE SPECIFIED. THIS DRAWING IS THE PROPERTY OF DELPHI PACKARD ELECTRIC SYSTEMS AND CONTAINS INFORMATION PERTAINING TO BE RIGHTS REPRESENTED BY DELPHI PACKARD ELECTRIC SYSTEMS REFERENCED.

ALL DIMENSIONS ARE IN MILLIMETERS

REFERENCE

(*) PROCESS SENSITIVE DIMENSION

DIMENSIONS ENCLOSED IN () INDICATE REFERENCE DIMENSIONS AND HAVE NO TOLERANCE LIMITS ON ESTABLISHED

| DIMENSIONAL RANGE (MM) | | | | | | | |