NOTA	SPECIFICATIONS
1	CONNECTEUR SUIVANT STE 96 432 578 99 *CONNECTOR ACCORDING STE 96 432 578 99*
2	ALVEOLE 2.8mm SUIVANT STE 96 301 961 99 *TERMINAL CAVITY 2.8mm ACCORDING TO STE 96 301 961 99*
3	ALVEOLE 8mm SUIVANT STE 96 417 535 99, SAUF COTES INDIQUEES SUR COUPE EE *TERMINAL CAVITY 8mm ACCORDING TO STE 96 417 535 99,* *EXCEPT COTATION ON SECTION E-E*
4	CONDITIONNEMENT SUIVANT NORME E 7703 150 G *PACKAGING ACCORDING TO STANDARD E 7703 150 G*
5	MASSE DU PRODUIT LIVRE = 55 g *DELIVERY CONNECTOR WEIGHT = 55g*
6	REF PLAN D'INTERFACE FCI : 240FT0115 *INTERFACE DRAWING REF FCI: 240FT0115*
7	PRECONISATION D'UTILISATION / *USER'S MANUEL* REF FCI / *FCI'S REF: PU 038*
8	CONTACT ET JUF COMPATIBLES A L'ALVEOLE NGI *TERMINAL AND SINGLE WIRE SEAL COMPATIBLE WITH NGI CAVITY*

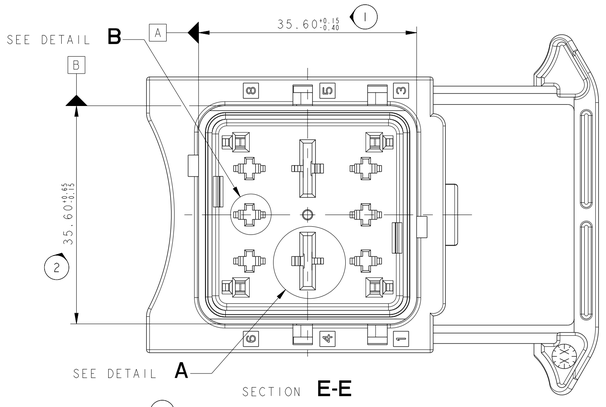

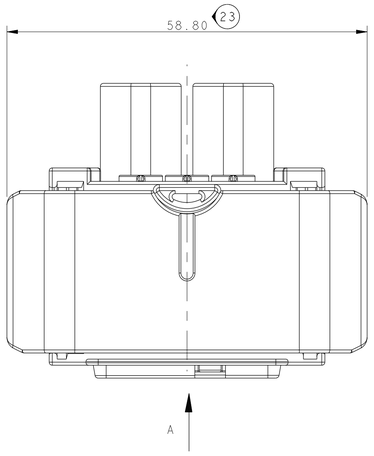

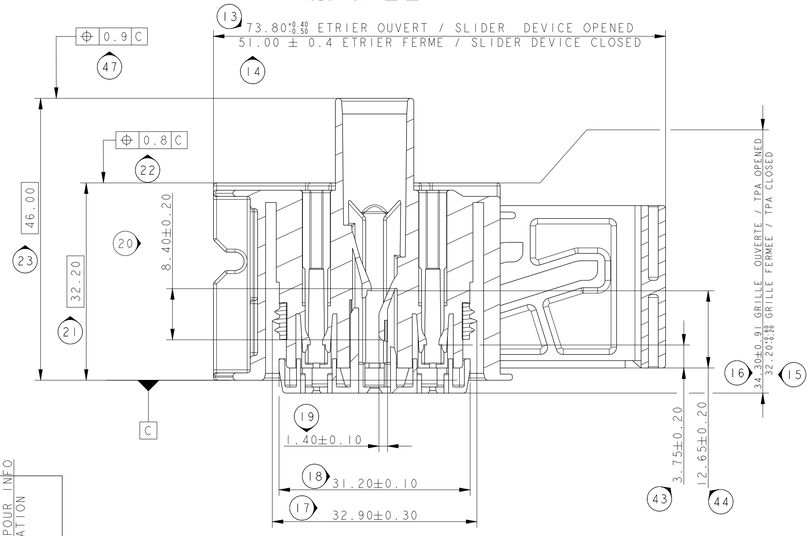

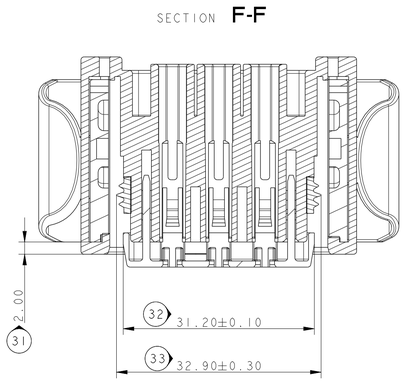

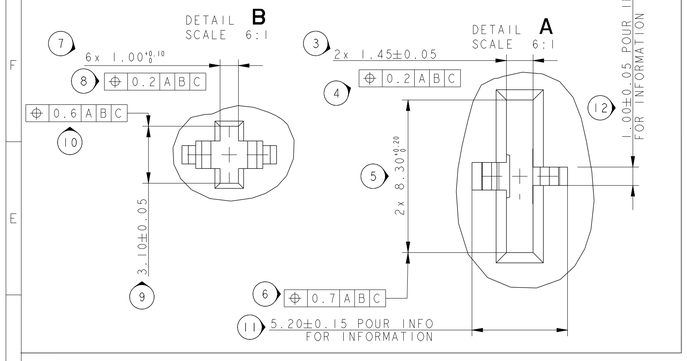

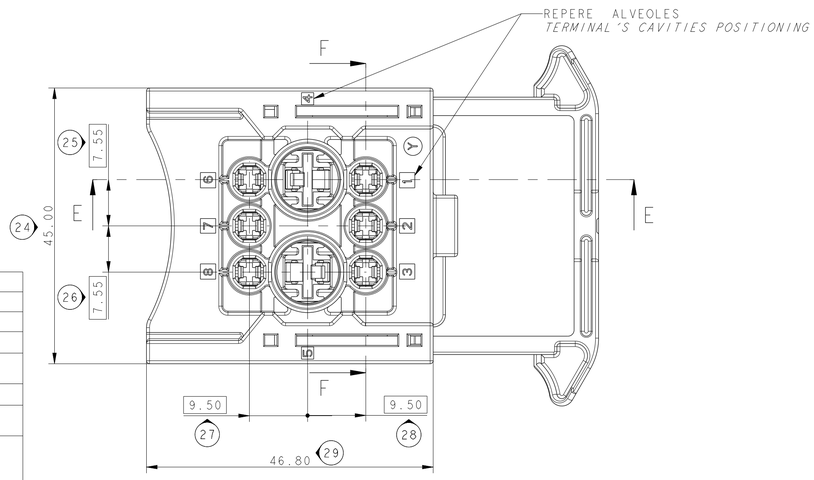

CODAGES / *KEYS*			
TOLERANCE ±0.1			
COULEUR / COLOUR		NOIR / *BLACK*	GRIS / *GREY*
MVL	INDICE PIECE / *PART LEVEL*	E	E
MVL	REFERENCE PORTE-CLIPS *FEMALE CONNECTOR PART NUMBER*	240PC089S0015	240PC089S8015
DELPHI	INDICE PIECE / *PART LEVEL*	02	01
DELPHI	REFERENCE PORTE-CLIPS *FEMALE CONNECTOR PART NUMBER*	10812007	13949302
VUE SUIVANT A *VIEW A*		(34) 14.05 / (35) 24.05	(36) 9.05 / (37) 20.05

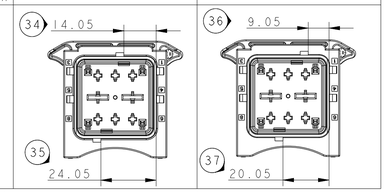

DESIGNATION / DESCRIPTION	REF MVL / MVL P/N	MATIERE / MATERIAL		COULEUR / COLOR
ISOLANT 8 VOIES / *8 WAY HOUSING*	240 1 0 014	PBT 15% GF	(38)	NOIR / *BLACK*
ISOLANT 8 VOIES / *8 WAY HOUSING*	240 1 8 014	PBT 15% GF	(39)	GRIS / *GREY*
ETRIER / *SLIDER*	240 M 6 020	PA 6.6 30% GF	(40)	BLEU / *BLUE*
GRILLE / *TPA*	240 M 4 017	PBT 15% GF	(41)	JAUNE / *YELLOW*
JOINT INTERFACIAL / *INTERFACIAL SEAL*	240 M 019	SILICONE	(42)	VERT / *GREEN*

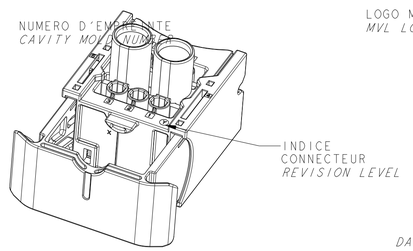

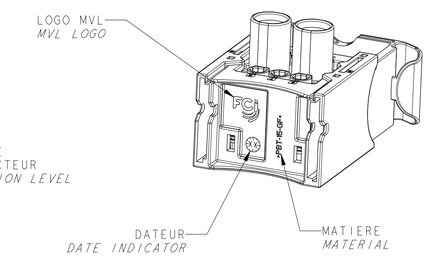

ECN NO. / NUMERO ECN	POSITION / POSITION	CHANGE DESCRIPTION / MODIFICATION
-	-	-
-	-	-
-	-	-
-	-	-
-	-	-
-	-	DELPHI P/N ADDED

PRODUCT SPEC. / SPECIF. PRODUIT: -
PACKAGING SPEC. / SPECIF. EMBALLAGE: -
APPLICATION SPEC. / SPECIF. APPLICATION: -

COPYRIGHT DELPHI CORPORATION AND/OR ITS AFFILIATES. ALL RIGHTS RESERVED. REVISED
THIS DRAWING IS THE PROPERTY OF DELPHI CORPORATION AND CONTAINS DELPHI CONFIDENTIAL INFORMATION. THE REPRODUCTION, DISTRIBUTION AND UTILIZATION OF THIS DOCUMENT OR ITS RELATED CAD MODEL DATA, AS WELL AS COMMUNICATION OF ANY CONTENT TO OTHERS, WITHOUT EXPRESS AUTHORIZATION, IS PROHIBITED.
CE PLAN EST LA PROPRIETE DE DELPHI CORPORATION ET CONTIENT DES INFORMATIONS DELPHI CONFIDENTIELLES. LA REPRODUCTION, LA DISTRIBUTION ET L'UTILISATION DE CE DOCUMENT OU DE SES DONNEES MOTEURS CAD, AINSI QUE LA COMMUNICATION DE TOUT CONTENU A AUTRUI, SANS AUTORISATION EXPRESSE, EST INTERDITE.

TOLERANCES / TOLERANCES: ±0.2 ±2° -
COUNTERPART Nr. / CONTRE-PARTIE N°: -
DO NOT MEASURE DRAWING / NE PAS PRENDRE DE COTES
MATERIAL / MATIERE: SEE PART LIST / VOIR TABLEAU
SURFACE FINISH / ETAT DE SURFACE: -
COLOUR / COULEUR: SEE KEYS TABLE
TOOL NO. / OUTIL N°: -
ECO Loc. / Code ECO B.E.: FE

	DATE / DATE	NAME / NOM
CREATED BY / CREE PAR	2001-04-02	PCC
MODIFIED BY / MODIF. PAR	2013/07/11	F FAURIE
CHECKED BY / VERIF. PAR	2013/07/15	S LACOTE
APPROVED BY / APPR. PAR	2013/07/15	L LETIRER

FILE NAME / NOM DE FICHIER: PCC0736942

DELPHI
DELPHI PACKARD ELECTRICAL/ELECTRONIC ARCHITECTURE
EPERNON, FRANCE

ISO PROJECTION / PROJECTION ISO
DIMENSION IN MILLIMETERS / DIMENSIONS EN MILLIMETRES

TITLE / DESIGNATION: FEMALE CONNECTOR 6x2.8 | 2x8
PROJECT / PROJET: 8-WAY EOBD
ESR NO. / NUMERO ESR: FRA-0952
CAT. NO. / NUMERO CAT: null
DOCUMENT UNDER PDS CONTROL / NO MODIFICATION ALLOWED OUTSIDE
DOCUMENT GERE SOUS P.D.S. / PAS DE MODIFICATION EN DEHORS

DRAWING NUMBER / REF. PLAN: PCC0736942
REV. / IND.: D
STATE / ETAT: SERIAL RELEASED
PART NUMBER / REF. ARTICLE: See Table
REV. / IND.: -

CAD SYSTEM: pro / eng.
DWG SIZE / FORMAT: A1
APPROVAL LEVEL / NIV. D'APPROBATION: -
SHEET / FEUILLE: 1
of / sur: 1
SCALE / ECH.: 2:1

EUR C04 112 F29