D

THIS DRAWING AND DESIGN HEREON CONSTITUTES A PROPRIETARY DESIGN OF PACKARD ELECTRIC DIVISION AND IS NOT TO BE DUPLICATED OR REPRODUCED WITHOUT AUTHORITY OF PACKARD ELECTRIC DIVISION.

DO NOT SCALE

PART NO. 1202 0125

PACKARD ELECTRIC DIVISION
GENERAL MOTORS CORPORATION
WARREN, OHIO

53A
4100A
2-P-C/N
197A
76V

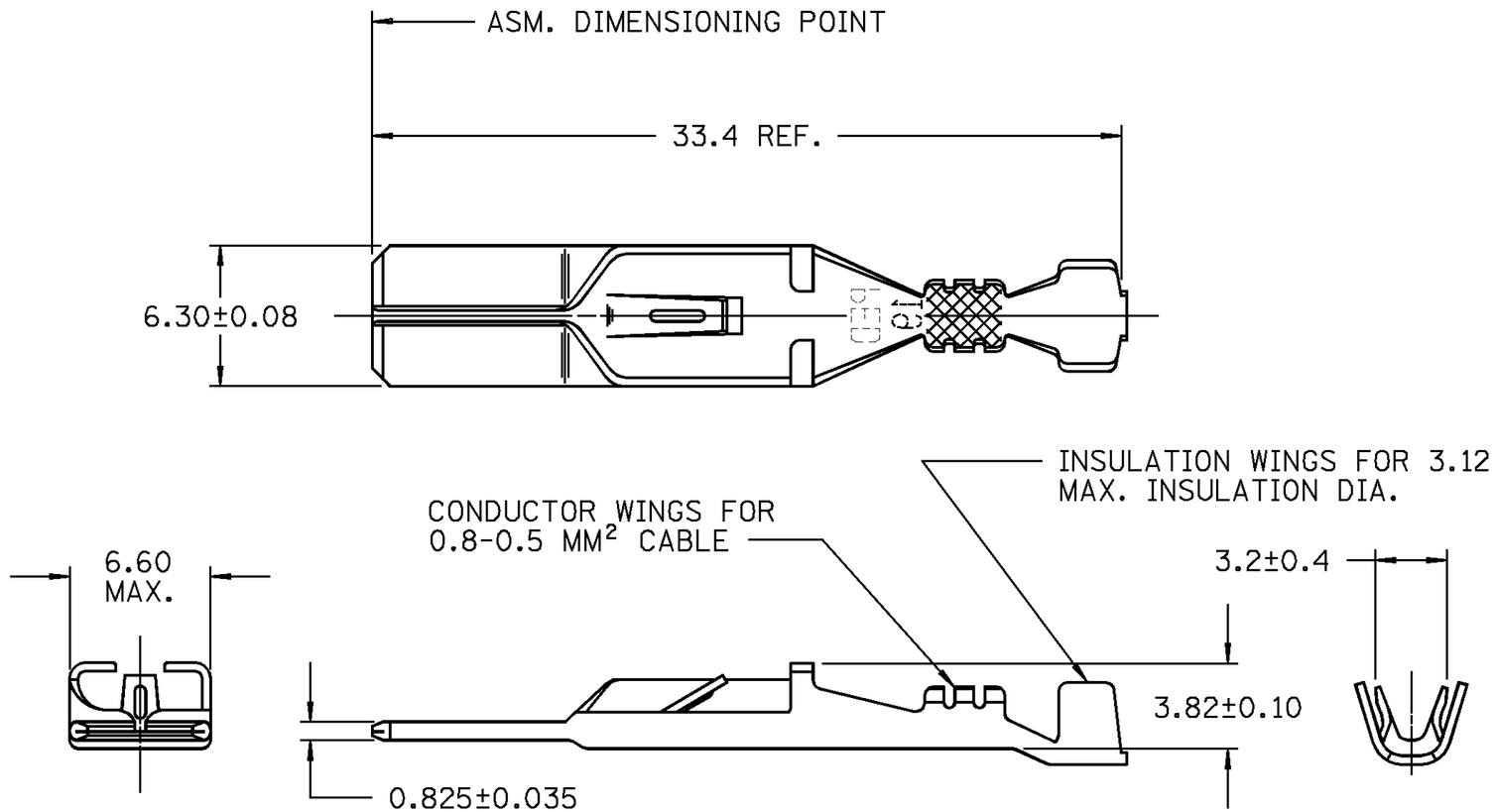

NOTE — MATING TERMINAL 12015832 OR EQUIVALENT.

DATE	SYM	REVISION RECORD	AUTHORITY	DR	CK
20JA89	—	REDRAWN & REVISED -			
		REV. LEVEL REMAINS AT "F"	123392	TPM	FH
01N093	G	REVISED MATERIAL SPEC	157145	TEB	TEB

PED/INTERGRAPH EMS

FILE SPEC: $$$$USER$$$$ DGN$SPECIFICATION$$$$$$$$$$$$ $$$$$SYTIME$$$$$$

THIRD ANGLE PROJECTION

METRIC
DIMENSIONS ARE IN MILLIMETERS UNLESS OTHERWISE SPECIFIED.

CODE NO. 6900

Q.C.

TOLERANCE UNLESS OTHERWISE SPECIFIED
DECIMAL: ONE PLACE ± 0.3, TWO PLACE ± 0.15
ANGULAR ±2°

DWG. DATE 20N080 | SCALE NONE | DR. KEVIN J. COOPER 20N080

EST. NO. | CK. D.E.THIRY | DATE 14JA81

REFERENCE NO. 12020124 "E" SIZE | SHEET 1 | APPR. E.M. BUNGO | DATE 15JA81

APPR. | DATE

MATERIAL SPEC. 0.381 THK. SAE CA 425 TIN BRASS - TIN PLATED

NAME TERM M M/P 630 SER

PART NO. 1202 0125 OUTLINE DRAWING

SIZE B

PACKARD ELECTRIC