THIS COPY IS PROVIDED ON A RESTRICTED BASIS AND IS NOT TO BE USED IN ANY WAY DETRIMENTAL TO THE INTERESTS OF PANCON.

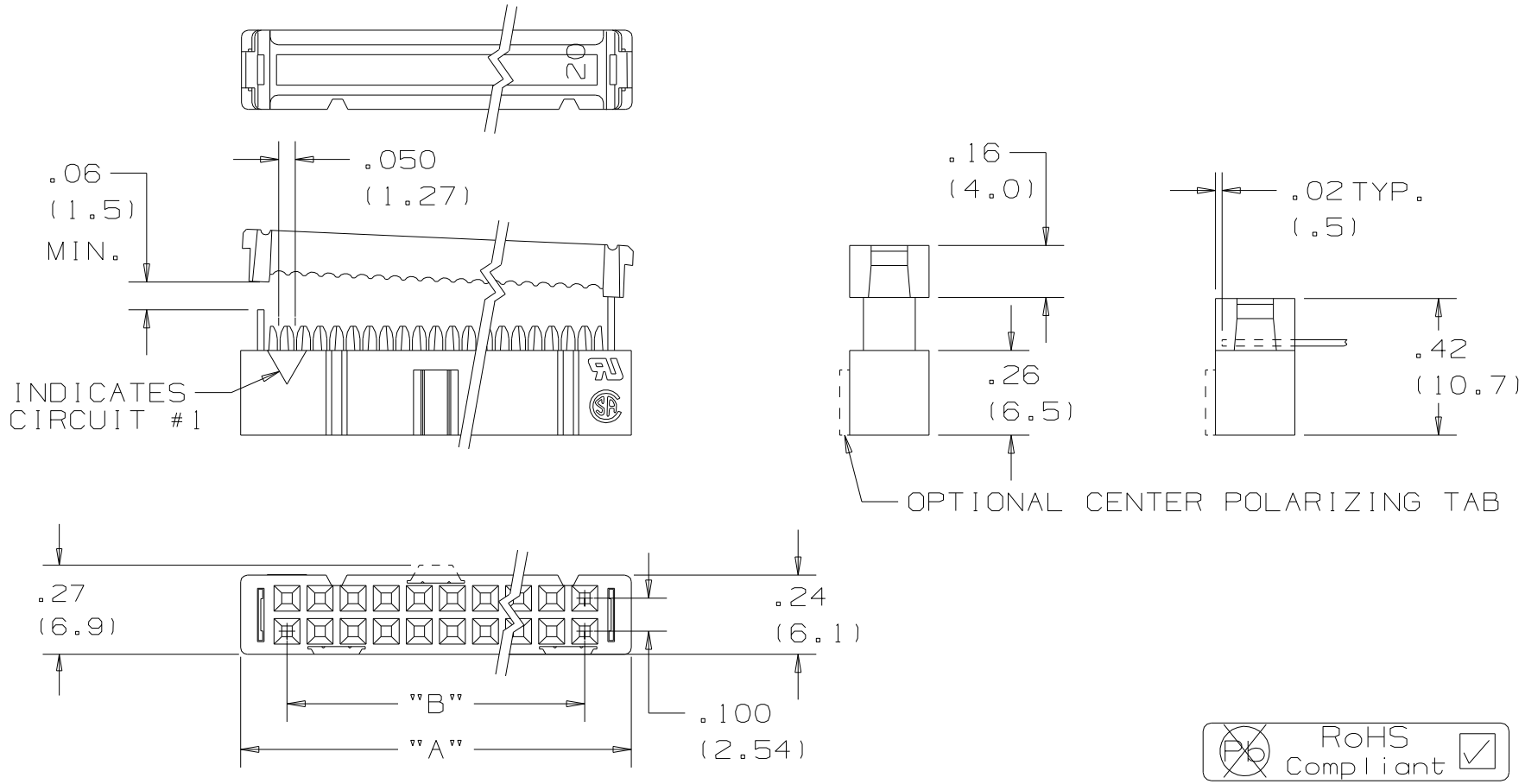

REV	DATE	BY	CHK	DESCRIPTION	CN - R	CUST	SUP
19	6/6/11	SC		ADDED PDNI PLATING	2330		

PANCON CONNECTORS
www.pancon.de / GERMANY
www.panconconnectors.com / USA

Bolingbrook, Illinois

LAT-CON™ 050 SERIES
SOCKET CONNECTOR

UNLESS OTHERWISE SPECIFIED, DIMENSIONAL TOLERANCES ARE:
(.X) ± (.XXX) ± .005(.13)
(.XX) ± .02(.5) ANGLES ±

UNLESS OTHERWISE SPECIFIED, ALL DIMENSIONS ARE GIVEN IN INCHES. THIRD ANGLE PROJECTION.

DRAWN BY	MAT'L	SCALE
DDU	SEE NOTES	2:1
DATE 4-17-86		DRAWING NO. KA-10239 SHT 1 OF 2
CHK'D WJH		DWG. SIZE A

THIS COPY IS PROVIDED ON A RESTRICTED BASIS AND IS NOT TO BE USED IN ANY WAY DETRIMENTAL TO THE INTERESTS OF PANCON.

NO. OF CKTS.	SOCKET DIMENSIONS "A" IN.	"A" MM	"B" IN.	"B" MM
6	0.48	12.2	0.20	5.1
10	0.68	17.3	0.40	10.2
14	0.88	22.4	0.60	15.2
16	0.98	24.9	0.70	17.8
20	1.18	30.0	0.90	22.9
26	1.48	37.6	1.20	30.5
30	1.68	42.8	1.40	35.6
34	1.88	47.8	1.60	40.6
40	2.18	55.4	1.90	48.3
50	2.68	68.1	2.40	61.0
60	3.18	80.8	2.90	73.7
64	3.38	85.9	3.10	78.7

SOCKET PART NUMBERING SYSTEM

050-034-455 A R

SERIES

A = STRAIN RELIEF
- = NO STRAIN RELIEF

NO. OF CIRCUITS

SELECTIVE PLATING
1= 200μ" BRIGHT TIN
3= 30μ" GOLD OR
GOLD FLASH OVER 24μ" PDNI
5= 15μ" GOLD OR
GOLD FLASH OVER 12μ" PDNI

A = OPTIONAL CENTER POLARIZATION TAB...LEAVE BLANK IF NOT NEEDED

R = CONNECTORS SUPPLIED ON REELS... LEAVE BLANK FOR BULK PACKAGING

U.L. RECOGNIZED: FILE E73711

NOTES;
1. HOUSING MATERIAL: GF PBT 94V0 LIGHT GRAY
2. CONTACT MATERIAL: PHOS BRONZE W/ GOLD OR PALLADIUM NICKEL WITH GOLD FLASH IN MATING AREA AND MATTE TIN PLATING OVER NICKEL ON IDC TAILS. BRIGHT TIN OVER NI OVERALL FOR -1- PART.
3. ALL DIMENSIONS SHOWN IN INCHES AND mm.
4. CONSULT FACTORY FOR NUMBER AND LOCATION OF AUXILIARY CODING SLOTS.

Pb RoHS Compliant ☑

REV	DATE	BY	CHK	DESCRIPTION	CN - R	CUST	SUP
19				SEE SHEET 1			

PANCON CONNECTORS
www.pancon.de / GERMANY
www.panconconnectors.com / USA
Bolingbrook, Illinois

LAT-CON™ 050 SERIES
SOCKET CONNECTOR

UNLESS OTHERWISE SPECIFIED, DIMENSIONAL TOLERANCES ARE:
(.X) ± (.XXX) ± .005(.13)
(.XX) ± .02(.5) ANGLES ±

UNLESS OTHERWISE SPECIFIED, ALL DIMENSIONS ARE GIVEN IN INCHES. THIRD ANGLE PROJECTION.

DRAWN BY: DDU
MAT'L: SEE NOTES
SCALE: NONE
DATE: 4-17-86
CHK'D: WJH
DRAWING NO. KA-10239 SHT 2 OF 2
DWG. SIZE: A