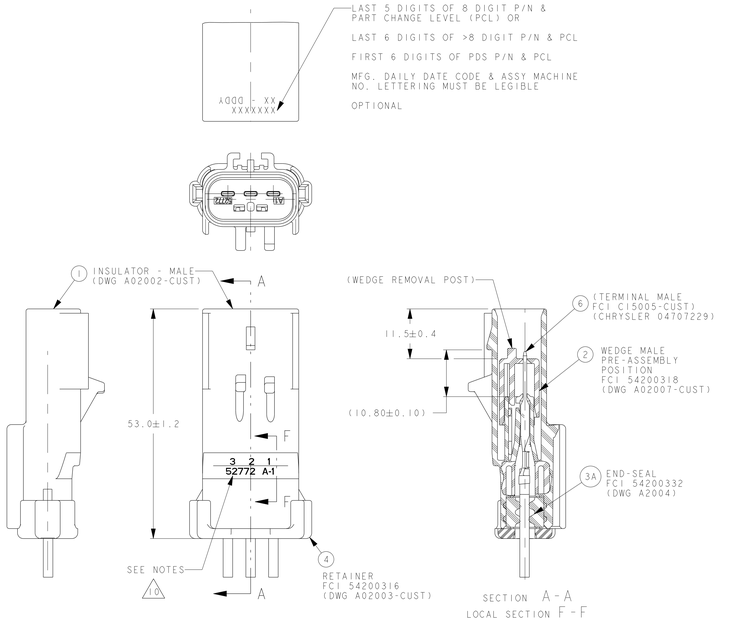

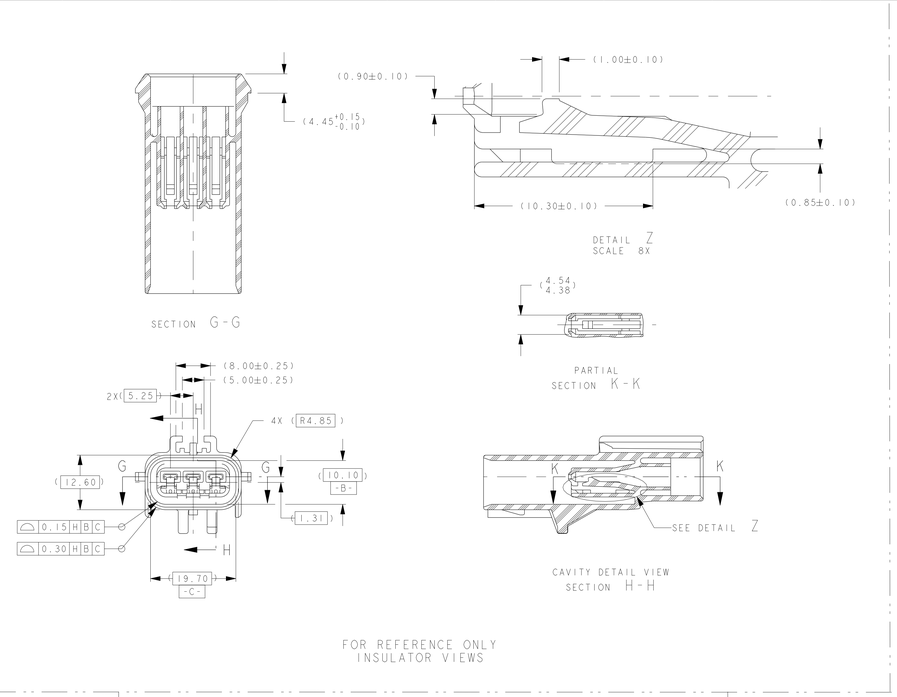

FOR REFERENCE ONLY
INSULATOR VIEWS

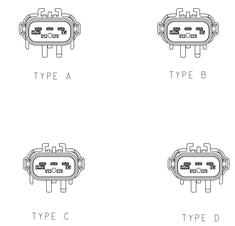

POLARIZATION OPTIONS
FULL SIZE VIEWS

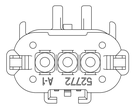

SEALED ASSEMBLY VIEWS
SEE PART NUMBER CHART

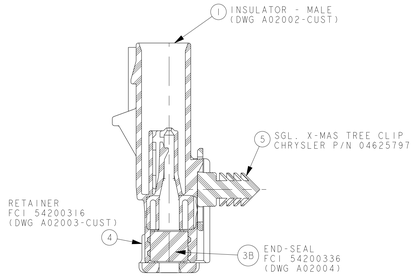

SUPPLEMENTARY
SECTION A-A
LOCAL SECTION F-F
SEALED PLUG
ASSEMBLY P/N 04794703AA & AB

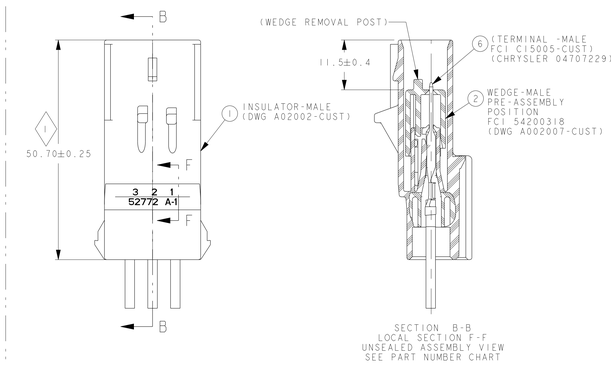

SECTION B-B
LOCAL SECTION F-F
UNSEALED ASSEMBLY VIEW
SEE PART NUMBER CHART

NOTES:

1. QUALITY ASSURANCE REQUIREMENTS PER CHRYSLER PS-7300; 1 SPC DATA REQUIRED
2. ENGINEERING APPROVAL OF SUPPLIER SAMPLES IS REQUIRED PRIOR TO AUTHORIZATION OF PART PRODUCTION
3. CHANGES IN DESIGN COMPOSITION OR PROCESSING FROM THE PART PREVIOUSLY APPROVED FOR PART PRODUCTION REQUIRES PRIOR ENGINEERING APPROVAL
4. WIRING FABRICATORS MUST PURCHASE FROM SOURCES SHOWN
5. ALL THE SEALED CONNECTOR APPLICATIONS MAY BE USED WITH CHRYSLER WIRE SPEC. MS-8288 OR MS-9502 THIN WALL X-LINK 20,18, 16&14 GAGE WIRES ONLY UNLESS OTHERWISE SPECIFIED SEE CHART (WIRE INSULATIONS Ø1.70 MIN TO Ø2.70 MAX).
6. ALL NON-SEALED APPLICATIONS MAY BE USED WITH ANY WIRE INSULATION 22 GAGE THRU 10 GAGE (EXCEPT AS NOTED) PROVIDING THAT A TERMINAL GRIP FOR THAT CORE/INSULATION COMBINATION IS SHOWN ON THE MALE TERMINAL DRAWING

   NOTE: MAX. INSULATION CRIMP WIDTH = 4.50
   MAX.INSULATION CRIMP HEIGHT = 4.50
   MAX. INSULATION DIA. = 4.09 (10 GA THIN WALL)
7. USE WITH CAVITY PLUG CHRYSLER P/N 56038308, FCI P/N 54200005 WHEN REQ'D
   USE WITH DOUBLE X-MAS TREE CLIP FCI P/N 54200010 W/FORWARD STOP WHEN REQUIRED
   USE WITH DOUBLE X-MAS TREE CLIP CHRYSLER P/N 04707091 WHEN REQUIRED
   USE WITH SINGLE X-MAS TREE CLIP CHRYSLER P/N 04625797 WHEN REQUIRED
   USE WITH 2.80MM APEX MALE TERM PER C15005-CUST SYM ABOUT CENTERLINE FOR 180° ORIENTATION
8. DIRECT CONNECT DRAWING NO. G36003 (CHRYSLER 56038158)
9. TEST METHOD PER SPEC# SAE/USCAR-2 REV.5, CONNECTOR ENGAGE & DISENGAGE WITH FEMALE LATCH DEPRESSED FORCE NOT TO EXCEED 75 N FOR THIS SYSTEM

   WEDGE SEATING FORCES - 100 N MAX
   X-MAS TREE CLIP INSERTION FORCES - 75 N MAX
10. SUPPLIER, MOLD & CAVITY I.D. SIGNIFIES TOOL OWNERSHIP, FOR REFERENCE
11. ANNUAL QUALITY REQUIREMENTS:
    IT IS PERMISSIBLE TO PERFORM CONTINUOUS CONFORMANCE PER FCI SPECIFICATION #AQA-001 INSTEAD OF ANNUAL LAYOUT & ANNUAL PV REQUIREMENTS OF QS-9000 SECTION 2 & SAE/USCAR-2 REV.5

    ALL NON-REFERENCE DIMENSIONS ARE REQUIRED

    - USE INDEX A, BLACK SEALED AND UNSEALED FOR ALL AFFECTED INSULATOR CAVITIES
    - CURRENT PRODUCTION TOOLING
    - POINT OF LAST RUN

    SERVICE TOOLING GUIDE INFORMATION PER APEX TRAINING MANUAL
12. MUST CONFORM TO THE FOLLOWING CHRYSLER/YNA STANDARDS:

    SAE/USCAR-2 REV.5
    PF-7300 QUALITY ASSURANCE (CHRYSLER)
    MS-9502 SEAL APPL. 150 °C
    MS-8288 SEAL APPL. 125 °C
    PS-9227 DATA EXCHANGE (CHRYSLER), (G0C9-7 YNA)
    PS-10052 INFORMATION SECURITY (CHRYSLER)
13. THIS DRAWING (H59011) REPLACES CHRYSLER DRAWING NUMBER 56038161 LEVEL "G". CHRYSLER DRAWING IS FOR REFERENCE ONLY FOR PREVIOUS CHANGES.

MATING PART NUMBER CHART

INDEX	TYPE	COLOR	SEALED/ UNSEALED	MALE ASSEMBLY PART NUMBERS FCI	MALE ASSEMBLY PART NUMBERS CUSTOMER	MATING ASSEMBLY PART NUMBER FOR REFERENCE ONLY FCI	MATING ASSEMBLY PART NUMBER FOR REFERENCE ONLY CUSTOMER
D	NATURAL		UNSEALED	54200307	N/A	54200303N	N/A
			UNSEALED	54200307	C 56038170	54200303	C 56038156
			SEALED	54200315	N/A	54200311N	N/A
			SEALED	54200315	C 56038166	54200311	C 56038152
C	DK GREY		UNSEALED	54200306	N/A	54200302N	N/A
			UNSEALED	54200306	C 56038169	54200302	C 56038155
			SEALED	54200314	N/A	54200310N	N/A
			SEALED	54200314	C 56038165	54200310	C 56038151
	DK BROWN		SEALED	F674110	N/A	F374110	N/A
B	LT GREY		UNSEALED	54200305	N/A	54200301N	N/A
			UNSEALED	54200305	C 56038168	54200301	C 56038154
			SEALED	54200313	N/A	54200309N	N/A
			SEALED	54200313	C 56038164	54200309	C 56038150
	DK BLUE		SEALED	F574110	N/A	F274110	N/A
A	BLACK		UNSEALED	54200304	N/A	54200300N	N/A
			UNSEALED	54200304	C 56038167	54200300	C 56038153
			SEALED	54200312	N/A	54200308N	N/A
			SEALED	54200312	N/A	54200335N	N/A
			SEALED	54200312	C 56038163	54200308	C 56038149
			SEALED	54200367	C 04794703AB	54200308	C 56038149
			SEALED	54200337	C 04794703AA	54200308	C 56038149
	DK GRN		SEALED	54200354	N/A	54200346N	N/A
			SEALED	54200354	N/A	54200346	N/A

CUSTOMER: C CHRYSLER
F FORD
GM GENERAL MOTORS
CU CUMMINS

FCI - FRAMATOME CONNECTORS INTERNATIONAL
YNA - YAZAKI NORTH AMERICA

FCI	52772 OR 52772 H	SEE CHART
VENDOR	VENDOR CODE	P/N

| CHART-ASSEMBLY PART NUMBERS | | |