1393366-2 ✔ ACTIVE

AMP | Get .64 Connector System

TE Internal #: 1393366-2

Automotive Terminals, Receptacle, Mating Tab Width 1 mm [.039 in], Tab Thickness .025 in [.64 mm], 20 – 18 AWG Wire Size, Get .64 Connector System

View on TE.com >

Terminals & Splices > Automotive Terminals > GET .64 CONNECTOR SYSTEM, RECEPT AND TAB

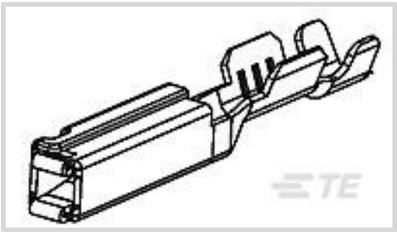

Terminal Type: **Receptacle**

Mating Tab Width: **1 mm [.039 in]**

Mating Tab Thickness: **.64 mm [.025 in]**

Terminal Transmits: **0 – 24 A (Low Power)**

Wire Size: **20 – 18 AWG**

All GET .64 CONNECTOR SYSTEM, RECEPT AND TAB (29)

Features

Product Type Features

Receptacle Style	180°
Sealable	No
Primary Locking Feature	Clean Body

Contact Features

Typical Current Rating	11 A
Crimp Type	F-Crimp
Terminal Type	Receptacle
Mating Tab Width	1 mm[.039 in]
Mating Tab Thickness	.64 mm[.025 in]
Interface Plating	Silver (Ag)
Contact Termination Area Plating Material	Tin (Sn)

Termination Features

Termination Method to Wire & Cable	Crimp
Product Terminates To	Wire

Dimensions

Wire Size	.5 – .75 mm^2
Wire Size Search	18 AWG, 19 AWG, 20 AWG

Wire Insulation Diameter	1.6 – 1.9 mm[.055 – .081 in]

Usage Conditions

Insulation Option	Uninsulated
Operating Temperature (Max)	80 °C, 85 °C, 90 °C, 100 °C, 105 °C, 110 °C, 120 °C, 125 °C[176 °F][185 °F][194 °F][212 °F][221 °F][230 °F][248 °F][257 °F]
Operating Temperature Range	-40 – 125 °C[-40 – 257 °F]

Operation/Application

Compatible With Wire Base Material	Copper

Packaging Features

Packaging Method	Reel
Packaging Quantity	10000

Other

Terminal Transmits	0 – 24 A (Low Power)

Product Compliance

For compliance documentation, visit the product page on TE.com>

EU RoHS Directive 2011/65/EU	Compliant
EU ELV Directive 2000/53/EC	Compliant
China RoHS 2 Directive MIIT Order No 32, 2016	No Restricted Materials Above Threshold
EU REACH Regulation (EC) No. 1907/2006	Current ECHA Candidate List: JAN 2022 (223) Candidate List Declared Against: JAN 2022 (223) Does not contain REACH SVHC
Halogen Content	Low Halogen - Br, Cl, F, I < 900 ppm per homogenous material. Also BFR/CFR/PVC Free
Solder Process Capability	Not applicable for solder process capability

Product Compliance Disclaimer

This information is provided based on reasonable inquiry of our suppliers and represents our current actual knowledge based on the information they provided. This information is subject to change. The part numbers that TE has identified as EU RoHS compliant have a maximum concentration of 0.1% by weight in homogenous materials for lead, hexavalent chromium, mercury, PBB, PBDE, DBP, BBP, DEHP, DIBP, and 0.01% for cadmium, or qualify for an exemption to these limits as defined in the Annexes of Directive 2011/65/EU (RoHS2). Finished electrical and electronic equipment products will be CE marked as required by Directive 2011/65/EU. Components may not be CE marked. Additionally, the part numbers that TE has identified as EU ELV compliant have a maximum concentration of 0.1% by weight in homogenous materials for lead, hexavalent chromium, and mercury, and 0.01% for cadmium, or qualify for an exemption to these limits as defined in the Annexes of Directive 2000/53/EC (ELV). Regarding the REACH Regulation, the information TE provides

on SVHC in articles for this part number is based on the latest European Chemicals Agency (ECHA) 'Guidance on requirements for substances in articles' posted at this URL: https://echa.europa.eu/guidance-documents/guidance-on-reach

Compatible Parts

TE Part # 2305570-1
TERMINAL CUTTER, SIDE FEED

TE Part # CAT-G3353-CH8172
GET .64 CONNECTOR SYSTEM, CONNECTOR HSG

TE Part # 2278398-1
3WAY GET 0.64 SEAL PLUG

TE Part # 2151539-1
OCEAN-2.0-APPLICATOR-S-070F068SP

TE Part # 1-1419168-1
MARKET 1X6 FEMALE SEALED

TE Part # 1924639-2
1X8 FEMALE ASSY KEY D, LP LATC

TE Part # 2-2151539-1
OCEAN-2.0-APPLICATOR-S-070F068SP

TE Part # 2-2151539-2
OCEAN-2.0-APPLICATOR-S-070F068SP

TE Part # 2151539-2
OCEAN-2.0-APPLICATOR-S-070F068SP

TE Part # 7-2151539-1
OCEAN-2.0-APPLICATOR-S-070F068SP

TE Part # 7-2151539-2
OCEAN-2.0-APPLICATOR-S-070F068SP

TE Part # 7-2151539-7
OCEAN_2.0_SPARE_PART_KIT-070F068SP

TE Part # 2272431-4
1X6 GET UNSLD SIDE LATCH PLUG, KEY D

TE Part # 1456570-6
SUB-ASSY,PLUG,2.8/6.3,38 WAY,ABS

TE Part # 1-1456570-6
SUB-ASSY,PLUG,2.8/6.3,38 WAY,ABS

TE Part # 1456570-8
SUB-ASSY,PLUG,2.8/6.3,38 WAY,ABS

TE Part # 2-1456570-3
SUB-ASSY,PLUG,2.8/6.3,38 WAY,ABS

TE Part # 2-1456570-4
SUB-ASSY,PLUG,2.8/6.3,38 WAY,ABS

Also in the Series | Get .64 Connector System

Automotive Connector Caps & Covers (7)

Automotive Housings(108)

Automotive Terminals(30)

Insertion & Extraction Tools(1)

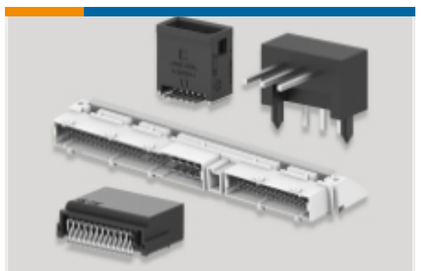

PCB Headers & Receptacles(1)

Customers Also Bought

TE Part #1743354-2
MT-II/JPT SLD 16P CAP HSG

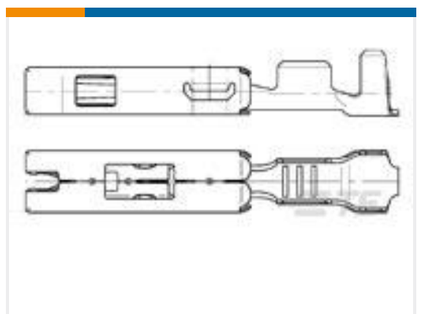

TE Part #929027-1
1.5MM SFC

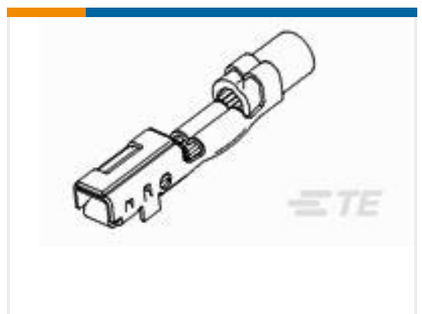

TE Part #1897598-1
090III MLC REC(LL) CONT

TE Part #284972-2
52POS MQS REC

TE Part #2209954-1
AIRBAG 24P COVER ASSY

TE Part #1813018-3
MINI FUSE RECEPTACLE

TE Part #1-2299988-1
REC CONN CVR ASSY,65POS,AMP MCP 1.5K

TE Part #2298002-1
SECONDARY LOCK, MQS/MCON1.2, DTB 50P

TE Part #2325415-1
40POS,ML .025,REC HSG ASSY,UNSLD

TE Part #284972-3
52 POS. MQS FEMALE CONNECTOR KIT ASS'Y_F

Documents

Product Drawings

GET-SOCKET TERMINAL, SILVER VE

English

CAD Files

3D PDF

3D

Customer View Model

ENG_CVM_CVM_1393366-2_B.2d_dxf.zip

English

Customer View Model

ENG_CVM_CVM_1393366-2_B.3d_igs.zip

English

Customer View Model

ENG_CVM_CVM_1393366-2_B.3d_stp.zip

English

By downloading the CAD file I accept and agree to the Terms and Conditions of use.

Datasheets & Catalog Pages

GET 0.64 Interconnection System

English

Product Specifications

Application Specification

English

Product Environmental Compliance

Product Compliance

English

Product Compliance

English