1-967626-1 ✔ ACTIVE

AMP | AMP MCP 2.8, AMP MCP Connector System

TE Internal #: 1-967626-1

Housing for Male Terminals, Wire-to-Wire, 9 Position, .197 in [5 mm] Centerline, Yellow, Signal, Panel Mount, -40 – 248 °F [-40 – 120 °C], Hybrid

View on TE.com >

Connectors > Automotive Connectors > Connector Housings > AMP MCP, UNSEALED CONNECTOR HOUSING

Connector & Housing Type: **Housing for Male Terminals**

Mating Tab Width: **2.8 mm [.11 in]**

Connector System: **Wire-to-Wire**

Number of Positions: **9**

Centerline (Pitch): **5 mm [.197 in]**

All AMP MCP, UNSEALED CONNECTOR HOUSING (187)

Features

Product Type Features

Connector & Housing Shape	Rectangular
Connector & Housing Type	Housing for Male Terminals
Connector System	Wire-to-Wire
Sealable	No
Hybrid Connector	No
Primary Locking Feature	On the Terminal

Configuration Features

Number of Positions	9
Number of Rows	3

Electrical Characteristics

Operating Voltage	28 VDC
Nominal Voltage Architecture	12 V, 24 V

Body Features

Cable Exit Angle	180°
Body Material	PA GF
Primary Product Color	Yellow
Connector Code	A

Contact Features

Contact Size	2.8mm
Contact Type	Tab
Mating Tab Width	2.8 mm[.11 in]

Mechanical Attachment

Mounting Feature	Without
Terminal Position Assurance	No
Strain Relief	Without
Mating Alignment Type	Keyed
Mating Alignment	With
Connector Mounting Type	Panel Mount

Housing Features

Centerline (Pitch)	5 mm[.197 in]

Dimensions

Product Width	35.45 mm[1.396 in]
Product Length	22.5 mm[.886 in]
Product Height	30.6 mm[1.205 in]

Usage Conditions

Operating Temperature (Max)	70 °C, 75 °C, 80 °C, 85 °C, 90 °C, 100 °C, 105 °C, 110 °C, 120 °C[158 °F][167 °F][176 °F][185 °F][194 °F][212 °F][221 °F][230 °F][248 °F]
Operating Temperature Range	-40 – 120 °C[-40 – 248 °F]

Operation/Application

Circuit Application	Signal

Packaging Features

Packaging Quantity	1100
Packaging Method	Bag

Other

Serviceable	No
Connector Position Assurance Capable	No

Product Compliance

For compliance documentation, visit the product page on TE.com>

EU RoHS Directive 2011/65/EU	Compliant
EU ELV Directive 2000/53/EC	Compliant
China RoHS 2 Directive MIIT Order No 32, 2016	No Restricted Materials Above Threshold
EU REACH Regulation (EC) No. 1907/2006	Current ECHA Candidate List: JAN 2022 (223) Candidate List Declared Against: JAN 2022 (223) Does not contain REACH SVHC
Halogen Content	Low Halogen - Br, Cl, F, I < 900 ppm per homogenous material. Also BFR/CFR/PVC Free
Solder Process Capability	Not applicable for solder process capability

Product Compliance Disclaimer

This information is provided based on reasonable inquiry of our suppliers and represents our current actual knowledge based on the information they provided. This information is subject to change. The part numbers that TE has identified as EU RoHS compliant have a maximum concentration of 0.1% by weight in homogenous materials for lead, hexavalent chromium, mercury, PBB, PBDE, DBP, BBP, DEHP, DIBP, and 0.01% for cadmium, or qualify for an exemption to these limits as defined in the Annexes of Directive 2011/65/EU (RoHS2). Finished electrical and electronic equipment products will be CE marked as required by Directive 2011/65/EU. Components may not be CE marked. Additionally, the part numbers that TE has identified as EU ELV compliant have a maximum concentration of 0.1% by weight in homogenous materials for lead, hexavalent chromium, and mercury, and 0.01% for cadmium, or qualify for an exemption to these limits as defined in the Annexes of Directive 2000/53/EC (ELV). Regarding the REACH Regulation, the information TE provides on SVHC in articles for this part number is based on the latest European Chemicals Agency (ECHA) 'Guidance on requirements for substances in articles' posted at this URL: https://echa.europa.eu/guidance-documents/guidance-on-reach

Compatible Parts

TE Part # CAT-T4827-CH8172
TIMER, CONNECTOR HOUSING

TE Part # 8-968971-1
MCP2.8 GEH 9P

TE Part # CAT-T4827-T273
TIMER, RECEPTACLE AND TAB

TE Part # 967631-1
2. KONT-SICHERUNG 9P

TE Part # 1745069-1
HOLDER FOR 070 NEW GEN. 6-21 POS JPT/MCP

Also in the Series | AMP MCP 2.8

Automotive Connector Caps & Covers (1)

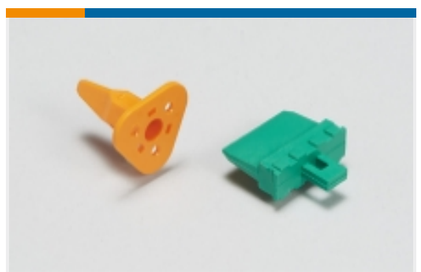

Automotive Connector Locks & Position Assurance(6)

Automotive Housings(179)

Automotive Seals & Cavity Plugs(1)

Automotive Terminals(6)

Insertion & Extraction Tools(6)

Module Components(1)

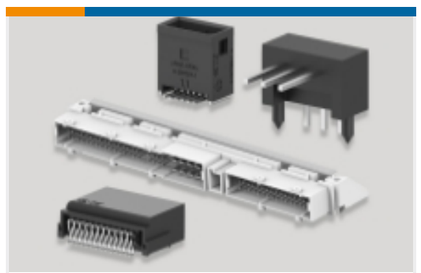

PCB Headers & Receptacles(1)

Also in the Series | AMP MCP Connector System

Automotive Connector Caps & Covers (24)

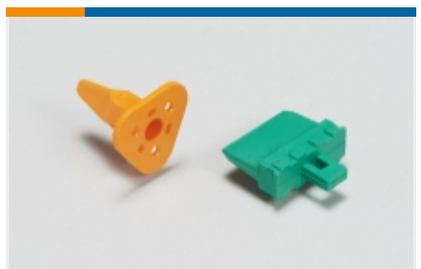

Automotive Connector Locks & Position Assurance(7)

Automotive Housings(352)

Automotive Seals & Cavity Plugs(6)

Automotive Terminals(125)

Insertion & Extraction Tools(13)

Other Automotive Connector Accessories(2)

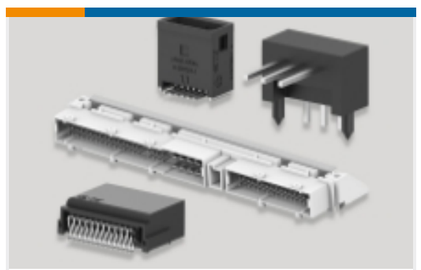

PCB Headers & Receptacles(29)

Customers Also Bought

TE Part #1-967621-1
TIMER, CONNECTOR HOUSING

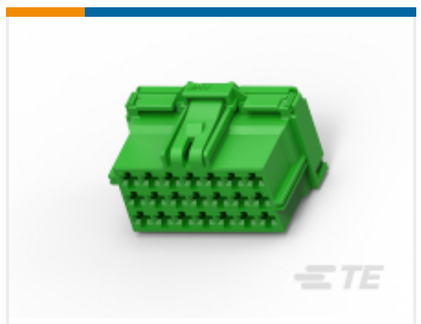

TE Part #8-968975-1
AMP MCP, UNSEALED CONNECTOR HOUSING

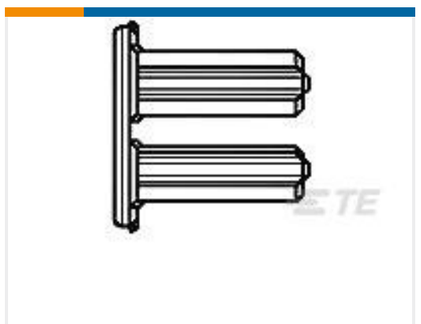

TE Part #967634-1
2. RETAINER FOR 18POS

TE Part #280080-1
FF 250 TAB 4-6MM2 BR

TE Part #2844234-1
PLATE, REAR SHEAR

Documents

Product Drawings

TAB HOUSING, 2,8MM,9POS.

English

TAB HOUSING, 2,8MM,9POS.

English

CAD Files

3D PDF

3D

Customer View Model
ENG_CVM_CVM_1-967626-1_G.2d_dxf.zip

English

Customer View Model
ENG_CVM_CVM_1-967626-1_G.3d_igs.zip

English

Customer View Model
ENG_CVM_CVM_1-967626-1_G.3d_stp.zip

English

By downloading the CAD file I accept and agree to the Terms and Conditions of use.

Product Specifications

Application Specification

English

Product Environmental Compliance

MD_1-967626-1_01032018821_dmtec

English

MD_1-967626-1_01032018821_dmtec

English